Operating Instructions

Strapping Machine VS11-H
- Translation of Original -

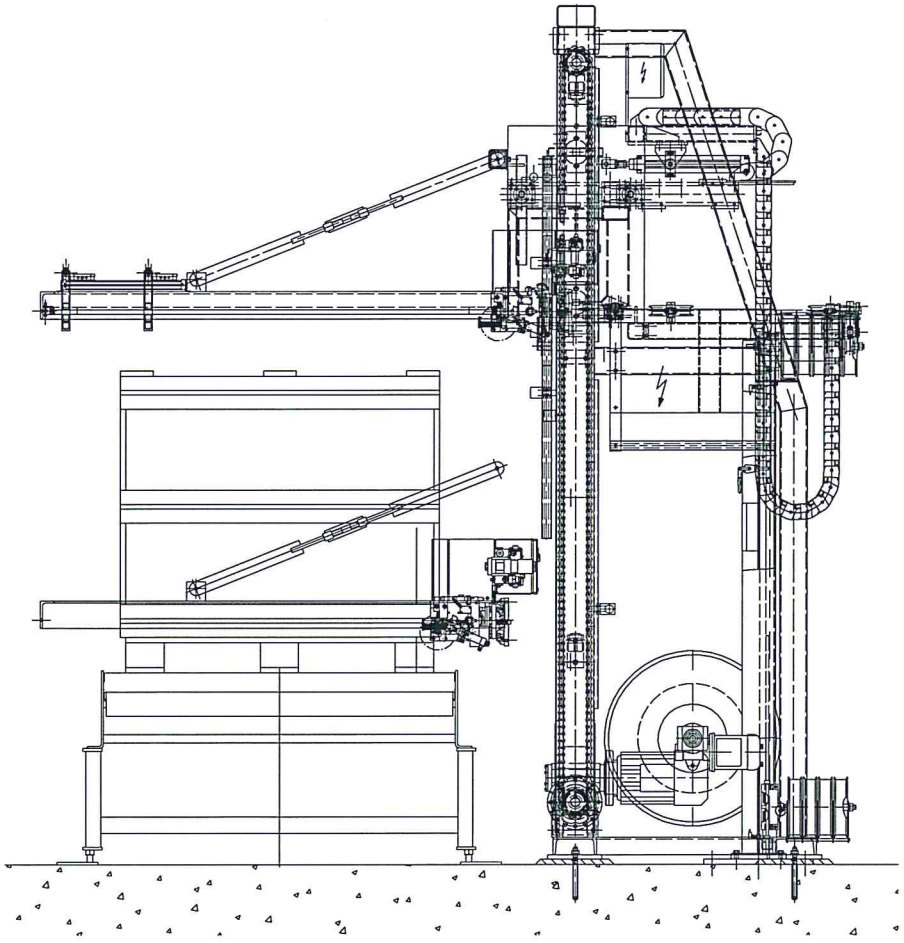

Carefully retain these Operating Instructions! The operator of the machine is obliged to make these instructions freely accessible to operating and service personnel and explain them, if required. We expressly point out that the instructions on hazard and safety must be observed.

INDEX

1. General 4
1.1. Manufacturer 4
1.2. Type 4
1.3. Declaration of Incorporation 5
2. Safety instructions 6
2.1. Intended use 7
Operation of the control: 8
2.2. Specification of the product 9
2.3. Specification of the strapping material 9
2.4. Working environment of the operators 10
3. Transport, erection, commissioning 11
3.1. Transport 11
3.2. Instructions for erection 12
3.2.1. Anchoring and fixing 14
3.2.2. Assembly of the strapping machine 16
3.3. Commissioning 17
3.3.1. Technical data 17
3.3.2. Preparing the machine ready for operation 18
3.3.3. Loading the strap 19
4. Operation 20
4.1. Machine components 20
4.2. Functional description 21
4.3. Operation 22
4.3.1. Mechanical, pneumatical and electrical safety equipment 23
4.3.2. Operation and control elements 24
4.3.3. Operation modes 25
4.3.4. Operation at the control console 26
4.3.4.1. Pushbuttons 26
4.3.4.2. Function of the control elements 27
4.3.5. Operation at the operator panel 28
4.3.6. Operator surface at of the OP - Menus 30
4.3.7. Operation of dispenser / accumulator 46
4.3.8. Operation at the strapping head 46
4.3.9. Manual mode head / semi-automatic 47

4.3.10. Automatic mode 48
4.3.11. Switch-off routines / emergency stop 49
4.3.11.1. Switching off the machine by means of the main switch 49
4.3.11.2. Switching the machine off in emergencies by means of the emergency stop switch 49
4.3.12. Restart after intervention 49
5. Trouble shooting and remedy 50
5.1. Fault messages 53
6. Service and maintenance 58
6.1. General 59
6.2. Maintenance of the TITAN strapping machine 60
6.3. Spare and wear parts 62
7. Decommissioning, dismantling, disposal 63
8. List of annexes 64

1. General

1.1. Manufacturer

TITAN Umreifungstechnik GmbH & Co. KG
Berliner Straße 51- 55
58332 Schwelm / Germany

Phone +49 (0) 2336- 808 0
Fax +49 (0) 2336- 808 208

Customer Service:

Phone +49 (0) 2336- 808 275
Fax +49 (0) 2336- 808 322
Mail kundendienst@titan-schwelm.de

1.2. Type

Steel strapping machine VS11-L- H

Year of construction	2013
Customer:	Maschinenfabrik Möllers GmbH
	Sudhofer Weg 93-97
	59269 Beckum / Germany
Project-No.:	T13079
OC No.:	14134839
Item No.:	76902174015

The identification plate is located well-visible at the operator side of the machine frame.

1.3. Declaration of Incorporation

2. Safety instructions

The Operating Instructions are part of the specified product. Carefully retain these instructions and hand them over in case of change of owner or operator.

Safety and operating instructions are high-lighted by means of particular marks.

Warning!

Possible injury or damage to persons, machine or objects in case of improper use.

Instructions for hazard prevention.

Information!

Important information relating to machine operation or to the relevant part of the operating instructions.

Caution! Danger to life!

Danger to health and body by electric current.

The relevant instructions of subsuppliers which are annexed to these Operating Instructions must be carefully read and observed. Furthermore, these documents are provided on the subsupplier's websites or may be ordered from TITAN.

At any phase of operation life the machine may only be operated and handled by qualified personnel who has been thoroughly trained in the machine functions and risks in connection with the machine (training to be recorded). Personal protective equipment to be used at any time.

For safe operation of the machine the operator company must denominate a responsible supervisor.

Any personnel working on the machine must be instructed about these Operating Instructions, the local conditions as well as the safety precautions (instruction to be recorded).

2.1. Intended use

The TITAN strapping machine is designed for fully automatic strapping of the products specified under chapter 2.2. Furthermore the machine must only be operated with the strapping material specified under chapter 2.3. The strapping machine is intended for industrial use.

Under the terms of the machine directives (2006/42/EC) the strapping machine is partly completed machinery. That means, partly completed machinery is intended for incorporation in other machinery. The operator of the strapping machine must integrate it in the safety equipment of this machinery.

Any other application or handling of the machine does not comply with the intended use of the machine.

The strapping machine is designed and manufactured in accordance with the state of the art technology and the approved technical safety regulations. Nevertheless, in case the safety instructions are not observed or the machine is used in an unintended way, hazard of injury of persons or damage to the machine or machine parts exists.

Prior to machine commissioning the operator must assure himself of the good order and condition of the machine.

Trouble-free and safe operation of the strapping machine requires appropriate transport, storage and assembly as well as proper operation and maintenance. Damages and malfunctions, in particular those impairing the machine safety, must be remedied immediately.

Warning!

Hazard to the operator or third persons or danger and damage to the machine or machine parts when strapping packages with other than the specified dimensions, materials, temperatures or shapes.

Risk of injury of persons in case of inadmissible access to the machine.

Observe intended use of the machine!

The machine must be operated by adequately trained and qualified personnel only.

The machine must be secured by means of protective equipment, such as fences etc., in order to avoid access to the machine area during operation.

Information!

Modifications of the machine for use other than the intended use described in these Operating Instructions are prohibited.

Caution! Danger to life!

Electric control cabinets and electric installations

Keep the doors of the electric control cabinets safely locked. The keys must be in safekeeping of a responsible person (electrical engineering master technician).

Access to the control cabinets is only permitted for qualified personnel trained in handling of electrical installations and their hazards.

Any work at the control cabinets and the electrical installations may be carried out by qualified persons only.

Caution! Danger to life!

Operation of the control:

The control devices installed in this control unit are designed for maximum lifetime and comply with the VDE-regulations. Same applies to the cabling and further technical equipment of the machine.
Trouble-free operation of the control elements can be guaranteed under the following conditions only:

- **Ambient temperature at the control cabinet acc. to specification**
- **No undue contamination of the control unit.**

Caution! Danger to life!

Operating the machine with open control cabinet doors is not admissible!

Even with switched-off mains switch several terminals or devices may be live. (power supply, external supply!)

2.2. Specification of the product

Wooden boxes on pallets

Dimensions: Box type-1:

Length:	1.440 mm
Width:	1.102 mm
Height:	1.070 mm

Dimensions: Box type-2:

Length:	1.541 mm
Width:	1.165 mm
Height:	1.105 mm

Dimensions: Box type-3:

Length:	1.400 mm
Width:	1.150 mm
Height:	1.125 mm

2.3. Specification of the strapping material

Strap quality:	TITAN steel strap "Automatenband" for operation with automatic systems
Dimensions:	16 x 0,5 mm
Strap length per 100 kg	1600 m
Coil weight:	50 kg

Note:

The machines are supplied with each one strap coil for the first test run and commissioning.

2.4. Working environment of the operators

In normal mode the machine is operated from the control console outside the danger zone.

In case of trouble-shooting or for loading of consumables the operators must enter the danger zone. The machine must be set to a safe operation mode.

Warning!

Danger of cuts by the steel strap.

Danger when opening the strapping. Strap may jump-up when cutting it.

Personal protective equipment:

Safety shoes, safety glasses, safety gloves, helmet

Information!

The machine must be operated by adequately trained and qualified personnel only.

Training is adequate when:

- **the interrelations and sequences of the individual functions and movements are correctly understood,**
- **the initial (home) positions of all movements are known,**
- **the manual functions can be carried out in correct order,**
- **the interlocking conditions of all movements are understood,**
- **all fault- and malfunction messages are known.**

Information!

Noise pressure level approx. 85 dB(A) in normal mode.

3. Transport, erection, commissioning

3.1. Transport

The machine is partly disassembled for transport.

The machine is delivered with a film packaging and, if required, with supports for transport. This packaging must not be removed for temporary storage because in this case corrosion protection and stability can no longer be guaranteed.

Dimensions and weights of the individual machine components:

Designation:	*Dimensions:* *W x H x T in mm*	*Weight in kg*

Warning!

Danger of squeezing, shearing or crushing during unloading on site.

Danger by dropping objects during cross-transport on site.

Personal protective equipment:

Safety shoes, safety gloves, helmet

Information!

Hoisting and transport must be carried out with adequate hoisting or transporting devices only. Use attachment points or load suspension points of the machine components.

Information!

The commissioning of the partly completed machinery is prohibited until it has been ensured that the final machinery into which it is incorporated fulfils the requirements of the EC directive on machinery and until a Declaration of Conformity according to Annex II A has been issued.

3.2. Instructions for erection

Warning!

Danger of squeezing, shearing or crushing during assembly.

Noise emission when drilling in concrete.

Personal protective equipment:

Safety shoes, safety gloves, helmet, ear protection

Caution! Danger to life!

Danger of electric shock when cabling or connecting cables or cable connections.

Connection to the mains supply must not be made before completion of the electrical installation.

Caution! Danger to life!

Caution: Risk of death and injury!
Any work at live components must be carried out in accordance with the supplied documentation by qualified electrical engineering technicians only.

The machine must be connected in accordance with the supplied documentation by the a.m. qualified technicians only. The specifications and regulations of the local energy suppliers must be observed.

Information!

Erection and assembly of the TITAN strapping machine must only be carried out by trained personnel with professional training in mechanical or electrical engineering.

Information!

Prior to erection and assembly the relevant safety equipment, such as fences, fenders, railings and chains relating to machinery, pits, platforms, travel paths and walkways existing on site must be duly installed.

Erection and assembly of the machine must be carried out in accordance with the following drawings and diagrams:

Designation	***No. of document***
Layout drawing VS11-H	4549000756
Pneumatic diagram	4545000387
Electric diagram	T13079 VS11-H

After completion of erection and prior to commissioning, settings and adjustments the chief erector must make sure that any machine components are properly erected and assembled. Only then the machine may be released for further handling.

Within the safety-relating systems of the control unit only approved parts as well as operating and switching elements acc. to the categories of EN 13849-1 must be used.

The operator company and the operating staff must provide and keep the shop floor such that no danger of slipping exists.

Prior to energizing the electric cabling the chief erector must make sure that any electric cables and connections are properly installed.

Any erection, assembly and disassembly of electric cabling and components must only be carried out by trained and instructed qualified personnel.

Observe the "Five safety rules" before working on electric parts:

1. Switch off
2. Lock against restart
3. Verify absence of voltage
4. Ground and short-circuit
5. Cover or block-off any live adjacent parts.

3.2.1. Anchoring and fixing

The layout drawing as well as the foundation plan are applicable for erection of the TITAN strapping machine. These documents provide the measurements required for anchoring and fixing.

The correct alignment of the individual components is a precondition for proper functioning of the machine:

- **Alignment of travelling rails:**

Horizontal +/- 2 mm height-related tolerance

Parallelism +/- 2 mm to the conveyor

- **Alignment of the strap guide channel system:**

Depending on the application rectangular or parallel +/- 2 mm to the conveyor.

- **Alignment of strap dispenser and accumulator:**

To be positioned acc. to the layout drawing +/- 50 mm.

Information!

Attachment of the bonding anchors must be made only after erection and assembly of the machine frame

---

After the strapping machine with the strap dispenser and accumulator has been positioned correctly, the foundation holes must be drilled in the shop floor. The base plates of the base frame serve as template for drilling.

The attachment holes of the strapping machine must be suitable for Fischer UPAT-UKA bonding anchors (chemical fixing).

Warning!

Observe machine stability! Danger in case of improper anchoring.

Only use the included bonding anchors for anchoring.

The stability of the machine depends on the proper fixing of the bonding anchors.

Information!

Carefully check the machine for proper anchoring and stability after erection and assembly.

- **Attachment of the bonding anchors:**

Prior to attaching the bonding anchors the concrete strength class of the foundation must be specified. The operator of the machine is responsible for the foundation conditions.

The minimum shop floor requirements are as follows:

Min. concrete strength class B25 (25 N/mm² compression strength)

Min. concrete thickness 170 mm

- Drill the borehole rectangular to the foundation surface.
- Observe borehole diameter and borehole depth.
- Remove the drill dust out of the borehole.
- Observe the specified anchoring depth. The depth marking must not be above the concrete surface.
- Inserting the glass cartridge into the borehole:
  Attach the anchor rod to the drill machine and insert it in the bore hole under pressure with switched-on hammer mechanism until the anchor marking is reached.
- Observe the adequate drying time.
- Screw-in by means of a calibrated torque spanner. Observe the torque specified hereafter.

The anchors must be tested at the 1.3-fold value of the admissible tensile load.
The test can be considered passed, if under test load conditions the slip does not exceed 0.2 mm.

Anchor size	M16	M20
Nominal borehole diameter	18 mm	25 mm
Borehole depth = insertion depth	125 mm	170 mm
Max. torque for fastening by means of torque spanner	80 Nm	150 Nm
Max. admissible load F (concrete strength class B25)	15 KN	27 KN
Drying time 10- 20°C > 20°C	 20 min 10 min	 20 min 10 min

3.2.2. Assembly of the strapping machine

- Mount the possibly missing components acc. to the assembly drawing.
- Reconnect the pneumatic lines which had been disconnected for transport acc. to the pneumatic diagram.
- Install and fasten the control console and the control cabinet acc. to the layout drawing.
- Lay supply cables and connect them in the control cabinet or resp. control console.
- Reconnect the cable connections which had been disconnected for transport acc. to the electric diagram.

3.3. Commissioning

3.3.1. Technical data

Energy data

Power supply	480 V
Protection class	IP 55
Frequency	60 Hz
Control and valve voltage	24 V DC
Nominal power	approx. 3.0 kW

Compressed air

Pressure at T.O.P	5.0 bar flow pressure
Compressed air quality acc. to DIN ISO 8573-1	3
Air requirement	0.3 Nm³/strapping

Environmental conditions

Ambient temperature	5- 50°C
Air pollution	normal
Levelness of floor	+/-10 mm
Max. air humidity	<40% at 40°C or >100% at 20°C

3.3.2. Preparing the machine ready for operation

In order to prepare the machine ready for operation, proceed as follows:

- Pressure check of the on-site air supply: min. 5 bars flow pressure.
- The shut-off valve of the air service unit must be open.
- Pressure check of the air service unit: set to min. 5 bars.
- Check the strap at dispenser and accumulator
    - Loading of strap as described under chapter 3.3.3
- Main switch ON
- Unlock EMERGENCY STOP and reset fault message by pressing the button "Reset Emergency Stop"
- Press illuminated push button "Control ON".
    - Signal light "Control ON" is on.
- In case of fault press button "Delete fault".
- Press illuminated push button "Manual"
    - Manual mode is selected, signal light is on.
- Press illuminated push button "Travel to home position"
    - The strapping machine is automatically moved to its home position.
    - Signal light „Home position" is on when the home position is reached.
- Illuminated push button "home position is on when all conditions are fulfilled.
  In addition, the menu "home position" displays the machine status "OK" when home position is reached.

Now the machine is in its home position and ready for operation.

3.3.3. Loading the strap

Danger of cuts by the steel strap.

Danger of squeezing:

When the dancer rollers of the strap accumulator are in lifted position and the clamping of the strap is loosened, the rollers drop down.

Personal protective equipment:

Safety shoes, safety glasses, safety gloves, helmet.

Observe the instructions, keep the strap accumulator filled.

The strap dispenser unit **ABS** consists of the components strap dispenser **ARS** and accumulator **BSC**.

Strap dispenser (ARS)

The strap dispenser supplies the strapping machine with the required packaging steel strap.

The dispenser drive is started when steel strap is drawn from the strap accumulator during a strapping cycle.

Strap accumulator (BSC)

The strap accumulator serves to take-up the strap quantity required for the channel filling of one strapping cycle. For strap feed the pneumatic motor of the strapping head draws the strap easily from the strap accumulator.
The excess strap created during strap retraction is guided back to the dancer rollers. Thus loose strap loops are avoided.

For a functional description and operating instructions of the strap dispenser unit ABS please refer to the separate "Operating Instructions".

4. Operation

Warning!

Danger of injury of persons when using inappropriate safety equipment.

Use safety barriers (fence) with electrically locked gate.

4.1. Machine components

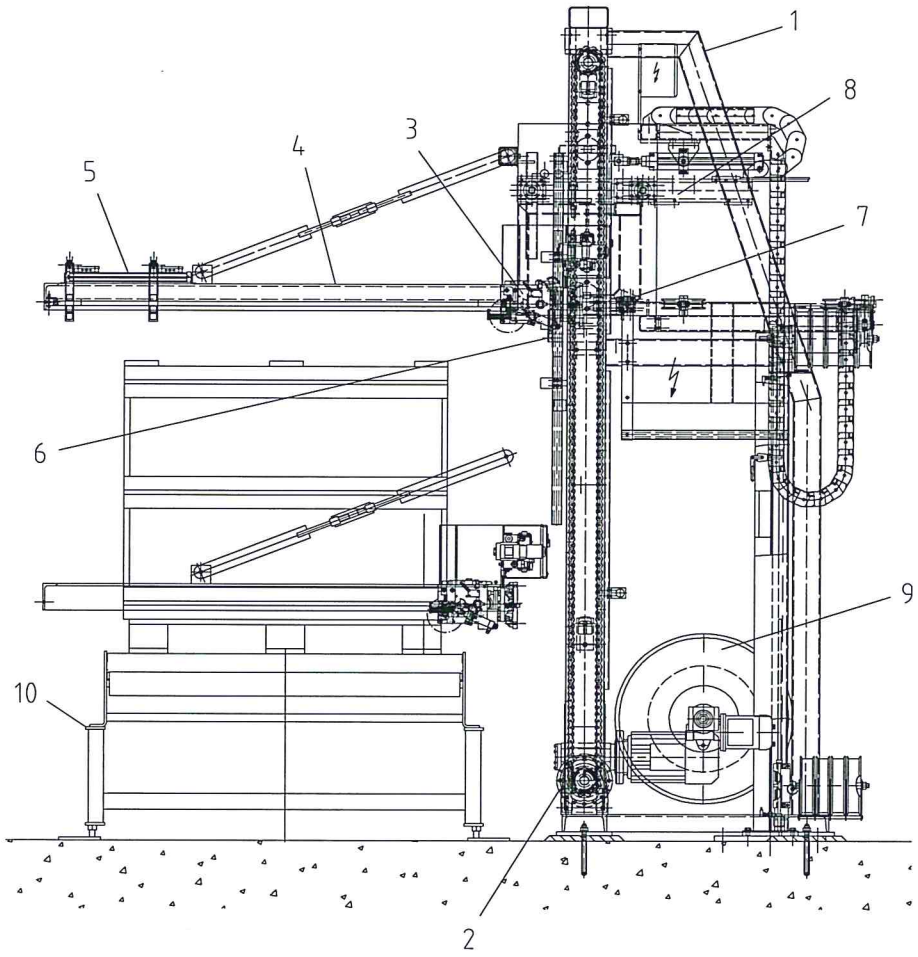

1	Machine frame	2	Strapping head lifting / lowering	3	Strapping head VS11-L
4	Strap guide channel	5	Strap guide arms	6	Safety locking
7	Strap clamp	8	Strapping head forward / backward	9	Dispenser ABS
10	On-site conveyor				

4.2. Functional description

The TITAN strapping machine operates fully automatically.

The package is indexed by customer's on-site conveyor into the area of the stationary strapping machine.

After the external signal "package in position" the strapping cycle is started.

Strapping cycle:

- Signal "package in position".
- Lowering the strapping head and the strap guide channel onto the first strapping position
- Moving the strapping head toward the package side face, max. stroke 300 mm
- Simultaneously positioning the strap guide arms at the package
- Strap take-up from the strap guide channel
- Strap tensioning until the preset tension force is reached
- Joint forming and cutting of the strap
- Moving the strapping head into the rear home position
- Simultaneously opening the strap guide arms
- Strap feed
- Lowering the strapping head and the strap guide channel onto the next strapping position
- All further straps are applied as described above.
- After application of the last strap the strapping head and the strap guide channel are moved back to their upper home position.
- The package is released for exit out of the machine and the next package is fed in.

Signal exchange with the conveyor control is made potential-free.

4.3. Operation

Information!

The machine may be operated by adequately trained and qualified personnel only.

Training is adequate when:

- **the interrelations and sequences of the individual functions and movements are correctly understood,**
- **the initial (home) positions of all movements are known,**
- **the manual functions can be carried out in correct order,**
- **the interlocking conditions of all movements are understood,**
- **all fault- and malfunction messages are known.**

No persons are allowed to stay in the danger zone of the machine.

Information!

Noise pressure level approx. 85 dB(A) in normal mode.

For safe operation of the machine the operator company must denominate a responsible supervisor.

Any personnel working on the machine must be instructed about these Operating Instructions, the local conditions as well as the safety precautions (instruction to be recorded).

At any phase of operation life the machine may only be operated and handled by qualified personnel who has been thoroughly trained in the machine functions and risks in connection with the machine (training to be recorded). Personal protective equipment to be used at any time.

Observe risk of tripping when entering the hazard zone of the machine.

4.3.1. Mechanical, pneumatical and electrical safety equipment

Safety barrier to other hazard zones by means of:

- Safety fencing in accordance with the current machinery directive
- Electrically controlled safety gate for entrance limitation

The mechanical safety devices provided by TITAN are not operative in case of danger caused by faulty package transport.

The customer must ensure that in case of machine fault the package conveyor area can be accessed e.g. for removal of strapping material.

The machine area is equipped with (safety-) devices.

- Pneumatic cylinder for machine movement, strap feed etc.
- Air service unit combination and valve block shut-off etc.
- Strapping head drives
- **Locking device** in order to secure the lifting and lowering of strapping head and strap guide channel frame. (see below)

Caution ! After entering the safety zone the safety locking must be folded inwards and engaged immediately. Only then the area below the channel frame may be accessed!

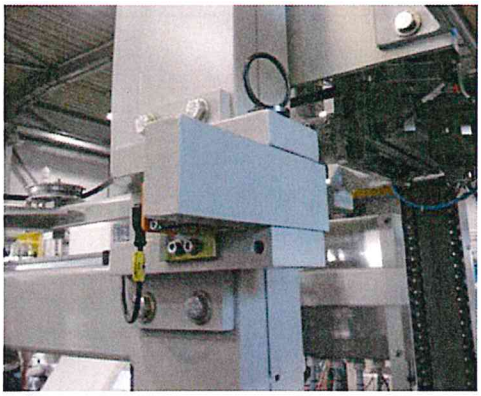

Safety locking folded outwards and secured by locking bolt.
Position electrically controlled.

Safety locking folded inwards and secured by locking bolt.

The strapping head with the channel frame are locked against lowering.

The machine area is equipped with electrical (safety-) devices:

- Electro-mechanically locked safety gates with access control (enabling contact)
- Local operating units (servicing and strap loading)
- Optical warning signals at customer's central control station after acknowledging the enabling contact of the electro-mechanically locked safety gates.
- electric drive of the steel strap dispenser

4.3.2. Operation and control elements

Element	*Funcion*	*Notes*
Control console	Main control element	
Control section strap accumulator	Control of strap dispenser and accumulator for threading-in strap	Accessible in service mode only
Control section strapping head	Control of the strapping head for insertion and removal of strapping material	Accessible in service mode only
Pressure switch	Monitoring of the system pressure	

4.3.3. Operation modes

Operation mode	*Function*	*Notes*
Manual	Strapping cycle step-by-step, operator-controlled	
Automatic	Automatic strapping cycle without operator intervention	Strapping cycle is monitored by the operator
Semi-automatic	Operation mode for trouble-shooting and remedy as well as for loading of consumables	Operator enters the danger zone. **Observe safety instructions!**

Warning!

In service mode:

Danger of cuts by the strap.

Danger when opening the strapping. Strap may jump-up when cutting it.

Danger of squeezing! Cylinders may be pressurized. Engage locking bolt.

Personal protective equipment:

Safety shoes, safety glasses, safety gloves, helmet

Information!

In order to avoid unforeseen machine standstill, service must be carried out regularly:

- **Visual check of bearings, rollers and linear roller bearings**
- **Oil level check**
- **Check of the water separator at the air service unit**

4.3.4. Operation at the control console

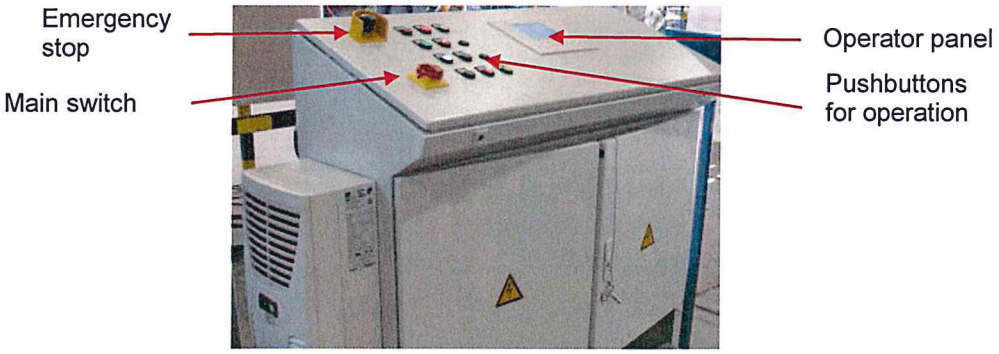

4.3.4.1. Pushbuttons

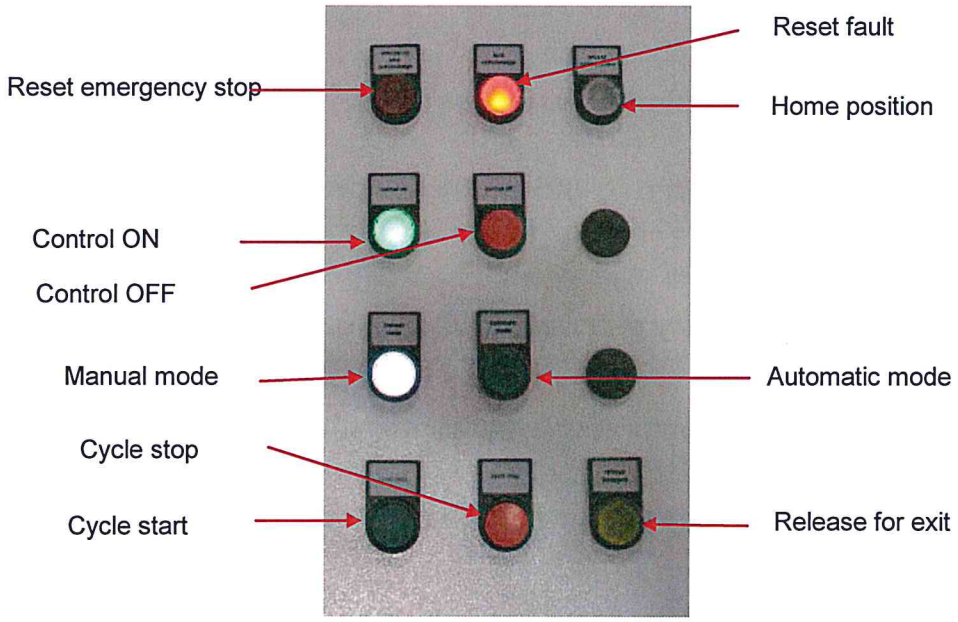

4.3.4.2. Function of the control elements

Emergency stop
By actuating the emergency stop the machine is stopped. The emergency stop switch is unlocked by turning it slightly to the left side.

Reset emergency stop
Activated emergency stop is signaled by illumination of the button.
This switch resets the state "emergency stop" – the illuminated pushbutton is no longer on. In case the state "emergency stop" cannot be reset, the emergency stop switch of the superior control must be unlocked.

Reset fault
Pressing this button resets faults after remedy of the cause. The pushbutton light is no longer on. The cause of the fault can be read from the text display.

Control ON
The push button "Control ON" starts the machine. The machine is activated when the illuminated pushbutton is on.

Control OFF
The machine is stopped by pressing the push button "Control OFF".

Home position run
This button moves the complete machine to home position as long as the button is pressed. When the button is released all movements are stopped.
The machine is in its home position when the illuminated button is on and machine movement has stopped.

Manual mode:
The manual execution of the individual machine function is described under menu "*Manual operation*".
This screen serves mainly to test the machine functions.

Automatic mode
The strapping cycle which is preset at the superior control is executed automatically.

Cycle start / start of a strapping cycle
This pushbutton starts a strapping cycle.

Cylce stop
This pushbutton stops a strapping cycle.

Release transport
By this pushbutton a release signal is transmitted to the conveyor.
When the light is on the release is signaled.
In case the light is blinking the release must be acknowledged by actuating the button, because the machine is in home position, however, had been stopped by a previous fault.

4.3.5. Operation at the operator panel

The submenus are opened by pressing the individual function keys in the active menu.

Note: This machine is provided with a Touch Display. That means that the relevant touch pads on the screen need slight touch only in order to be activated and perform the corresponding function.

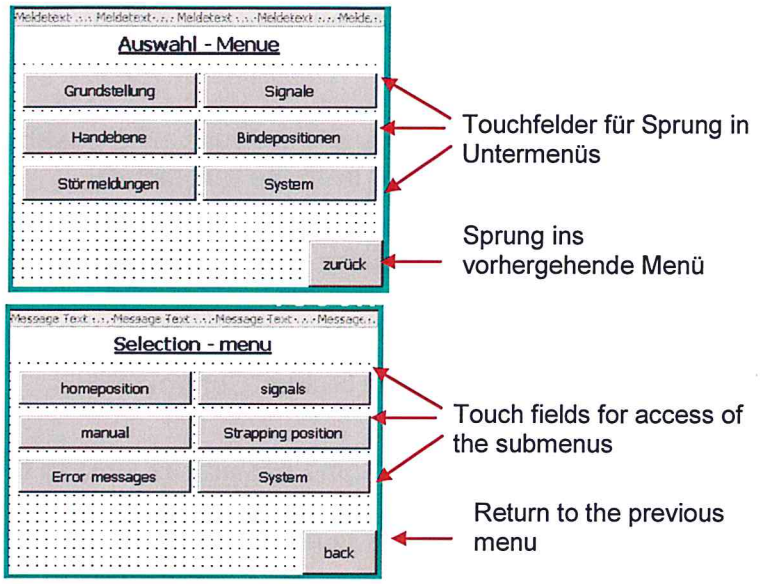

By the individual touch fields in the active screen the corresponding submenus can be accessed.

Parameter setting:

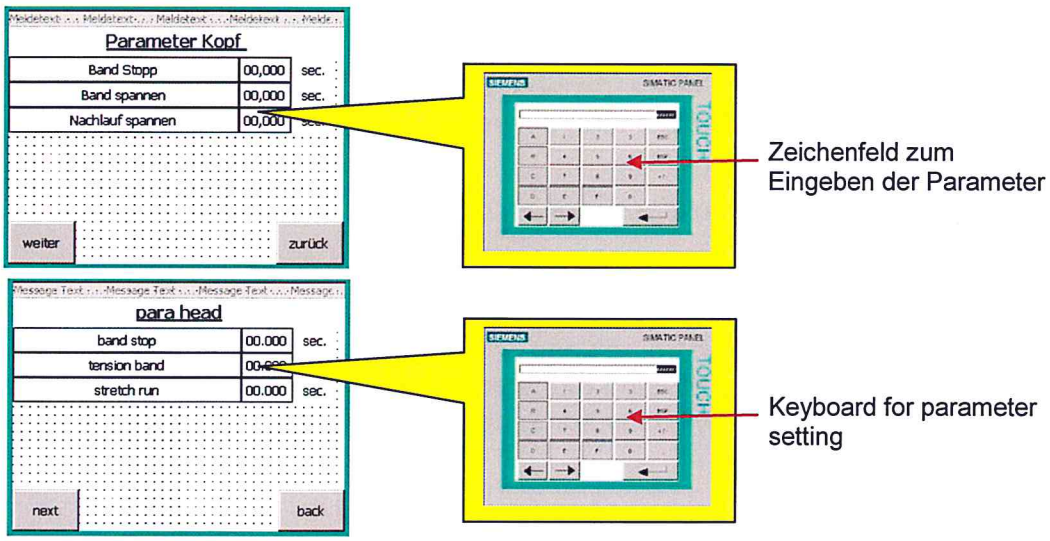

- Parameters are set via the touch panel
- An input field is opened automatically
- Parameter input by means of the key board
- Input is confirmed and entered by the enter key and ←/

Some input is password-protected in order to prevent unauthorized persons from modifying the settings.

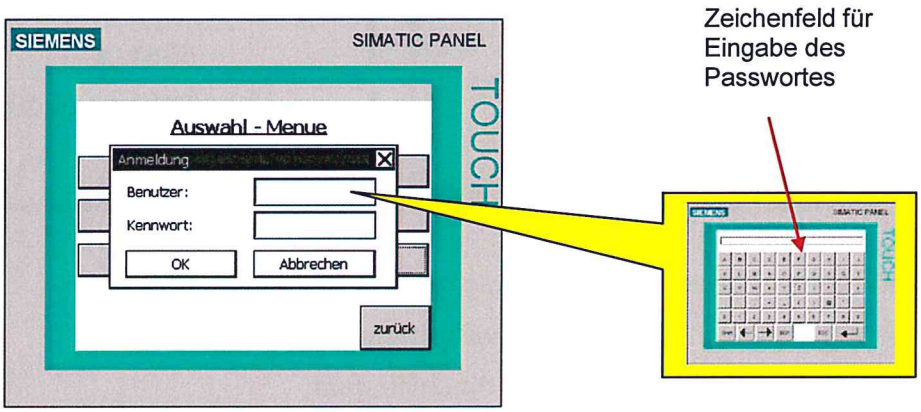

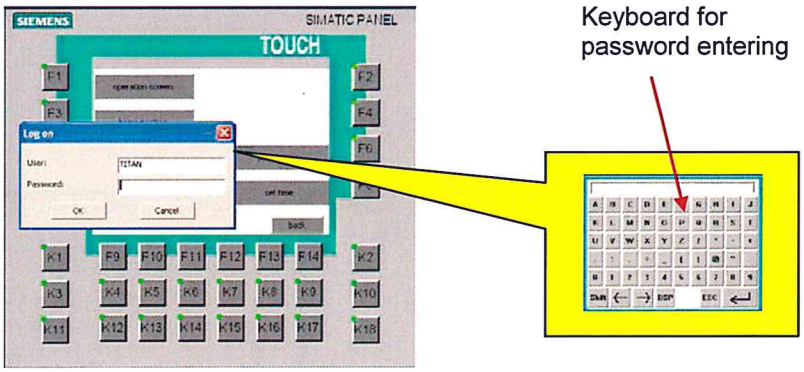

- The password mask is opened.
- Touching the input field opens a letter/digit keyboard automatically.
- The password can be edited by touching the keys.

user : titan password: 100

- Input is confirmed and entered by the enter key ←/.

4.3.6. Operator surface at of the OP - Menus

Menu – Start

The start menu appears after switching on the machine.

By actuating the touch pads the following menus can be accessed:

- **Info** – Manufacturer's address and machine data
- **Menu** – Jump to the operator surface

Menu - Info

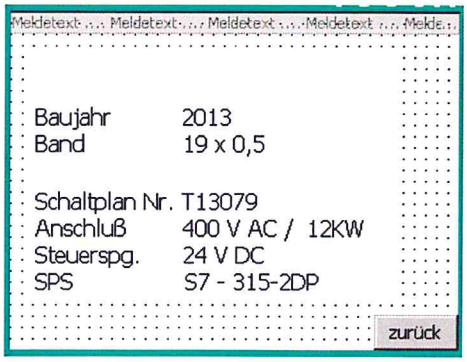

Menu – Selection

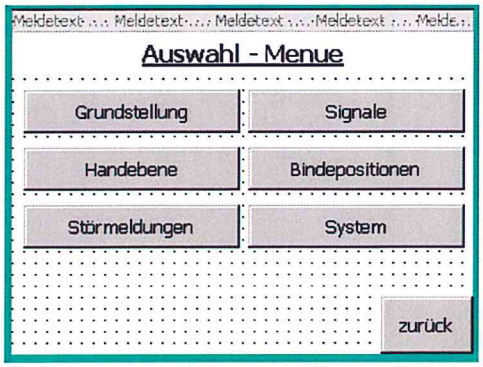

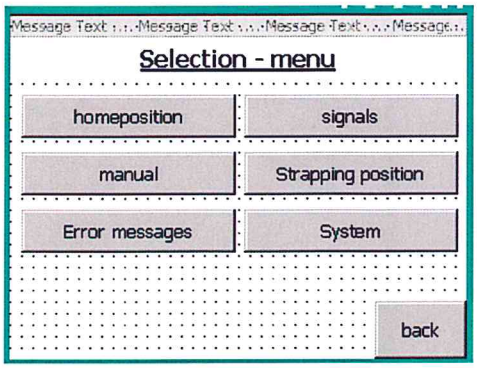

From the main menu the individual submenus can be accessed:
- Home position
- Manual mode
- Signals status values
- Strapping positions
- Faults
- System OP

Menu – Home position

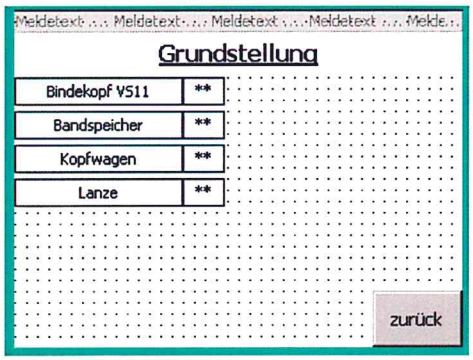

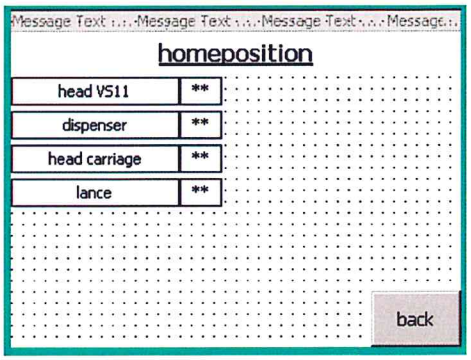

This menu serves to diagnostics. It provides information on the current position of strapping head, strap accumulator.....

The machine home positions can be controlled here. In case the home position of an individual component has not been reached the display shows „ ** „.

The machine is in home position when all information fields show "OK".

Menu – Manual operation

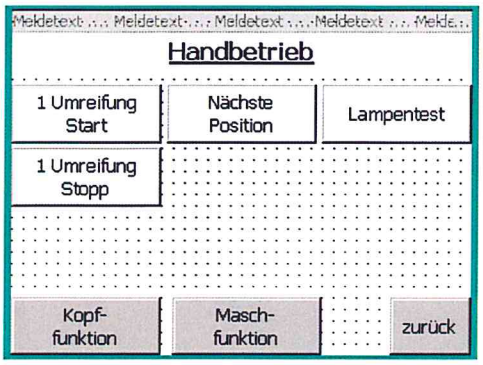

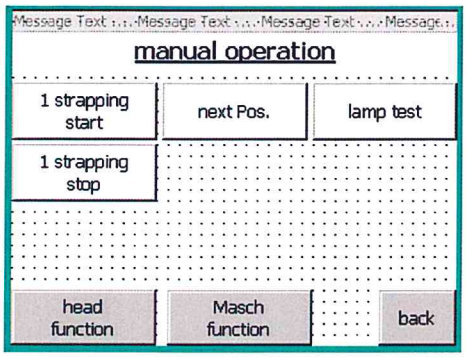

1 strapping start / stop
Pressing these buttons starts or stops a strapping cycle if the machine is in home position. This is possible in "manual mode" only (semi-automatic).

Next pos.
Pressing this button moves the machine to the next strapping position.

Lamp test
Pressing this button activates all illuminated pushbutton. The function serves to test the lights.

From this menu the following submenus can be accessed:

- Manual VS 11 strapping head
- Manual machine functions

Menu – Manual mode strapping head

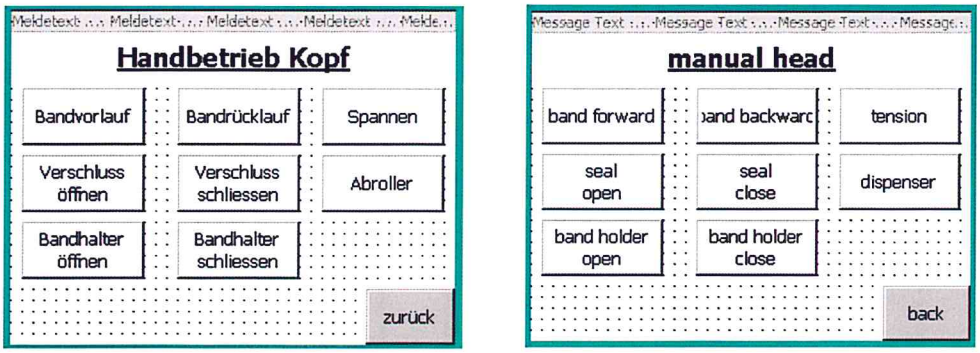

By this menu the individual functions can be tested in manual mode.

Strap feed forward (band forward)
Pressing this button activates the strap feeding motor as long as the button is pressed. After reaching the strapping head, the strap feed forward is stopped.
The strap feeding motor operates only with the cam gear in home position.

Pressing the button "strap feed backward" (band backward) activates the strap retraction motor as long as the button is pressed.

Tensioning:
Pressing the button "tension" activates the tensioning motor as long as the button is pressed.

Sealing
The button "seal open" activates the cam gar motor as long as the button is pressed. After reaching the opening position the drive is stopped.

The button "seal close" activates the cam gar motor as long as the button is pressed. After reaching the zero position (head closed) the drive is stopped.

Menu – Manual mode machine

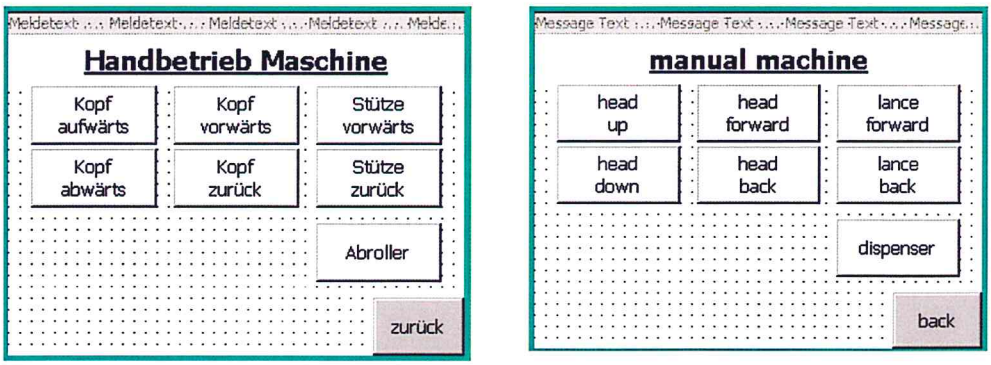

By this menu the individual machine functions can be tested in manual mode.

Menu – Status inputs

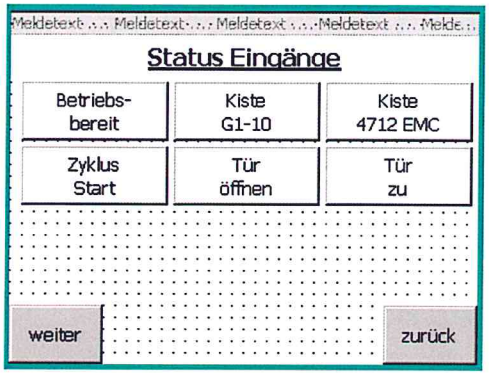

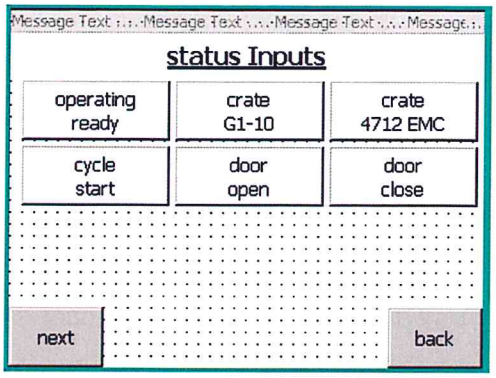

By this menu the status' of the selected input signals is displayed.
Signal 1 = dark-shaded field

Menu – Status outputs

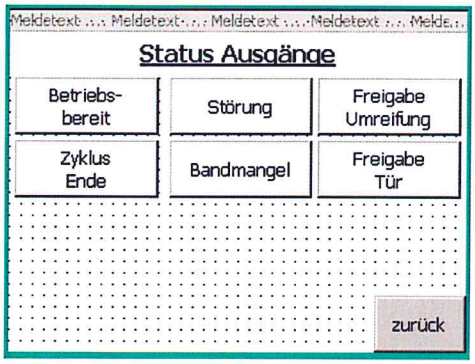

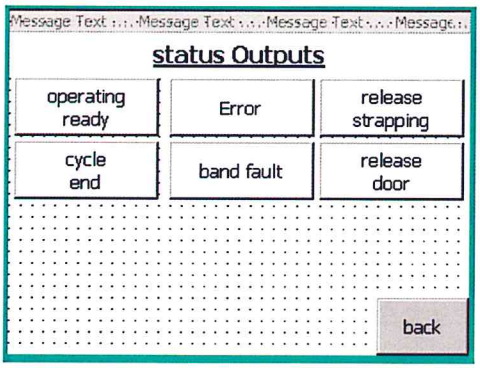

By this menu the status' of the selected output signals is displayed.
Signal 1 = dark-shaded field

Menu – Strapping position

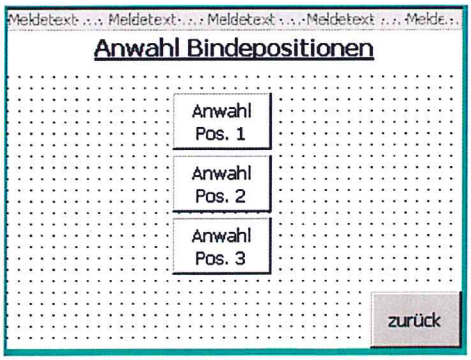

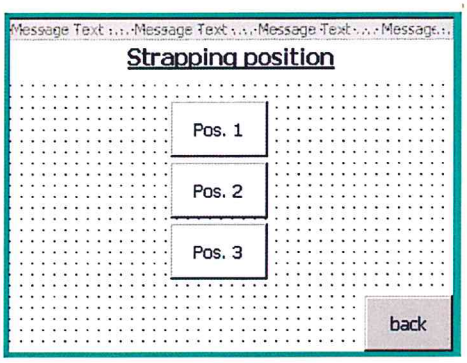

This menu serves to preset the strapping positions. The selected position is displayed by a dark-shaded field.

Multiple positions can be selected.

Menu – Fault messages

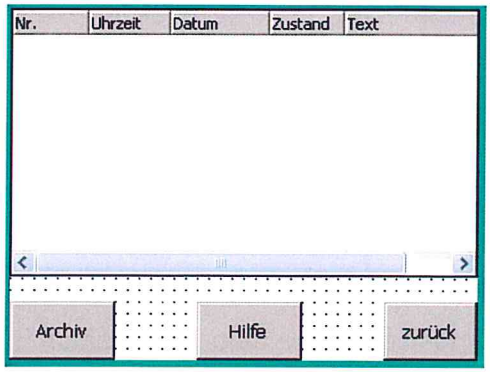

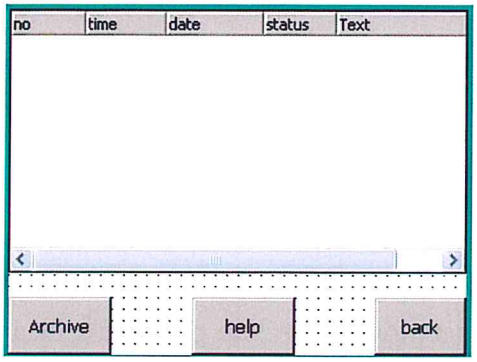

The scroll bar serves to scroll up/down the fault messages in case there are more messages than one screen can display. The latest message is always displayed on the screen top.

The message buffer is accessed by means of the button "archive". All messages since the last deleting of the message buffer are displayed here.

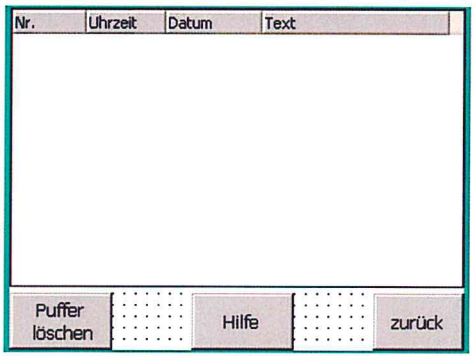

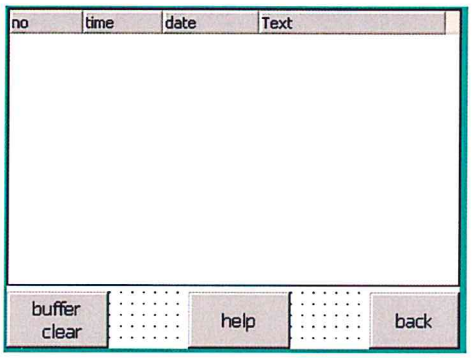

Buffer clear – When deleting the message buffer only the active messages remain on the screen.

Menu - System

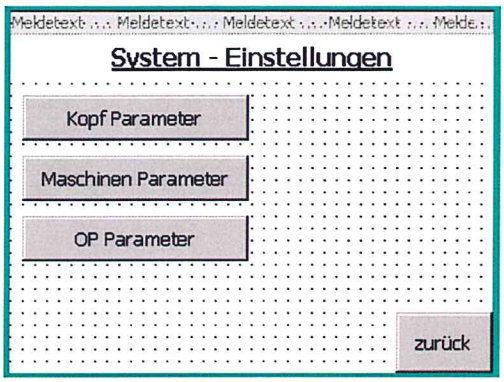

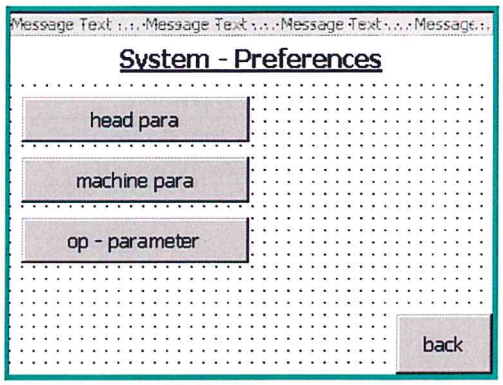

From this screen the operator can jump to the following submenus.

Head para:	settings at the strapping head
Machine para:	settings of the strapping machine
OP parameter:	OP system settings

Menu – Head parameter VS 11

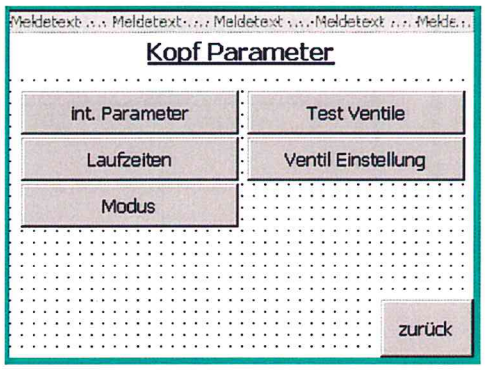

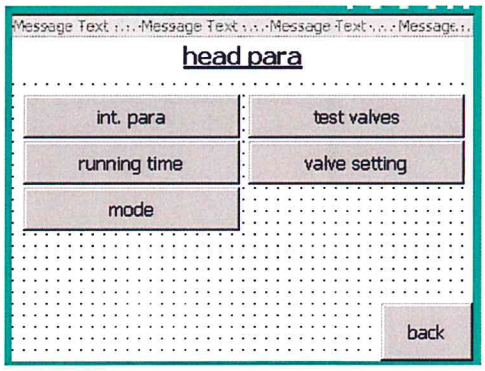

From this screen the following submenus are reached:

Int. Para :	Settings at the strapping head
Running time :	Monitoring parameters of the strapping machine
Mode:	Presetting at the strapping head
Test valves:	Manual valve control
Valve setting:	Speed setting – valve control

Menu – Internal head parameters VS 11

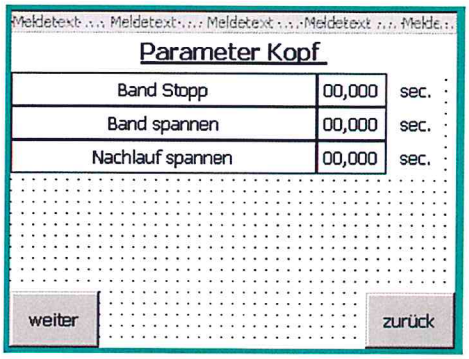

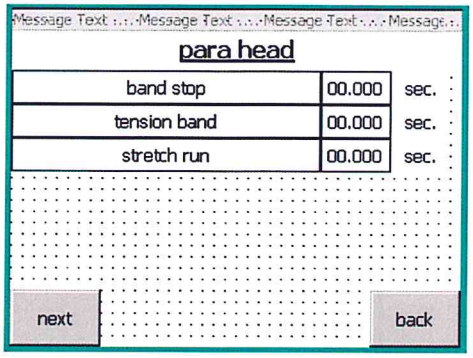

Strap stop (band stop)
The strap is stopped after the preset time.

Tensioning (tension band)
Strap tensioning terminated after the preset time.

Stretch run
The time for motor to maintain the tension force until the second clamping is done.

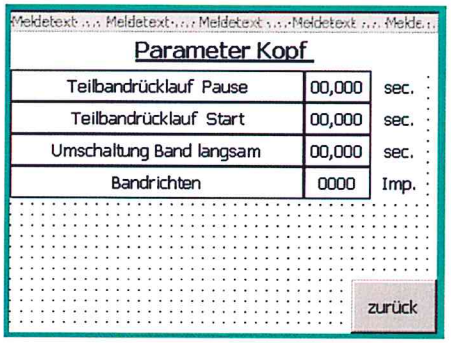

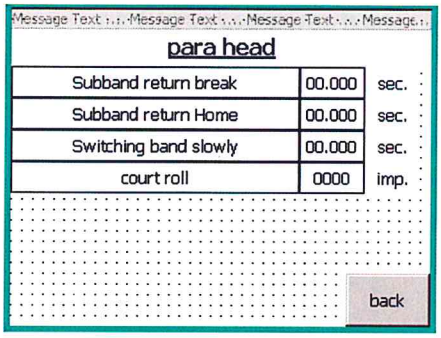

Partial strap take-up (subband return break)
Delay for starting the partial strap take-up (feed backward).

Partial strap take-up start (subband return Home)
Duration of partial strap take-up (feed backward).

Switching band slowly
Switching time from changeover of "strap feed forward" to "strap feed forward slowly"

Strap straightening (court roll)
Pulse for triggering the straightening rollers.

Menu – Run time monitoring

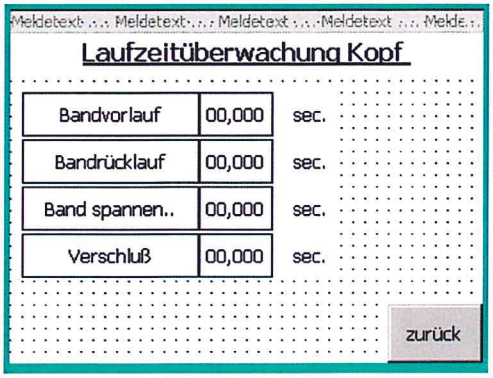

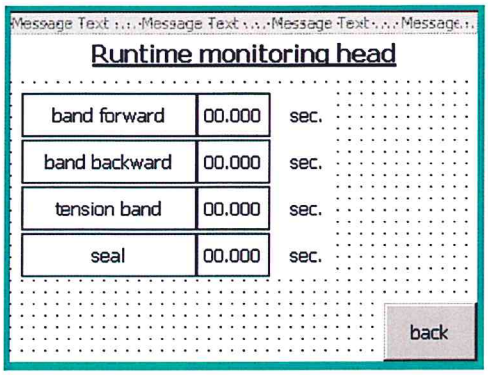

Strap feed forward (band forward)
Max. timeframe for execution of the function until the function is interrupted and a fault message displayed.

Same applies to all other functions.

Menu – Mode

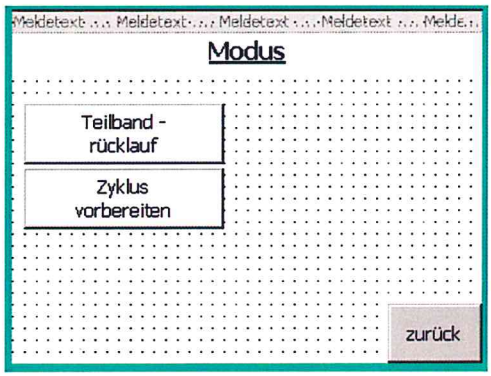

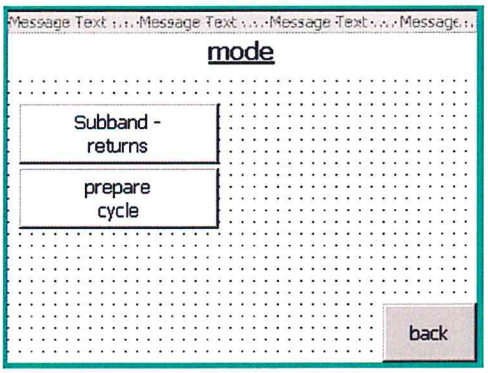

Presetting of the strapping process with its corresponding functions

Menü – Test valves

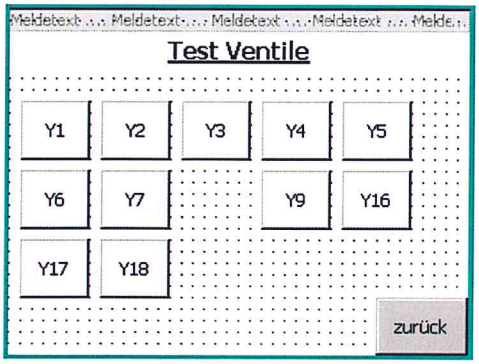

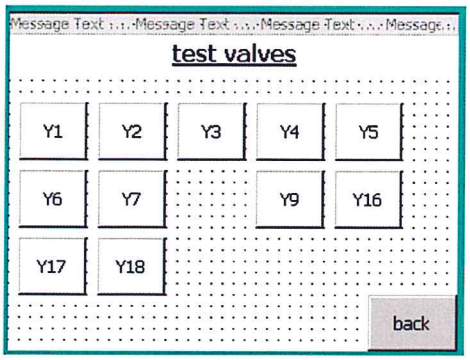

The menu "test valves" provides the possibility of testing the functions without interlocking. By pressing the corresponding valve buttons the functions are executed.

Attention!
Incorrect operation may damage the machine. Therefore, this menu is password-protected.

Menu – Mode valves

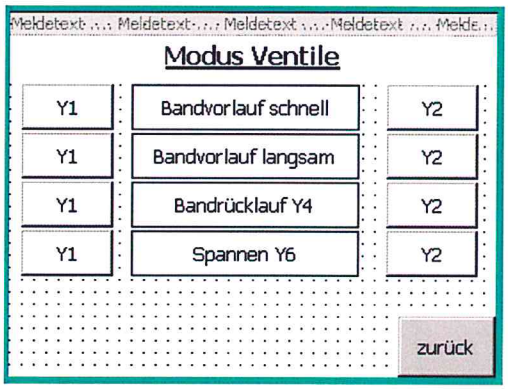

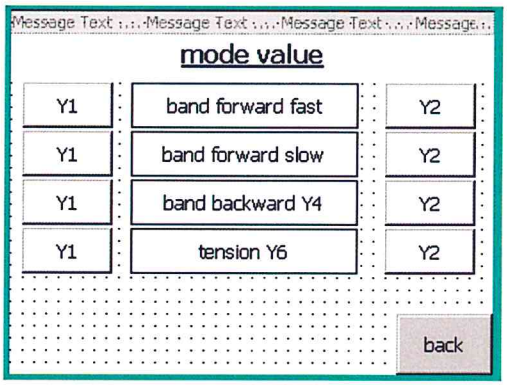

Valve settings

Presetting of the pneumatic valves Y1 and Y2 at the strapping head

3 speeds for the pneumatic motors at the strapping head are provided:

1.	Low	Y1 OFF	and	Y2 OFF
2.	Medium	Y1 ON	and	Y2 OFF
3.	High	Y1 ON	and	Y2 ON

These setting are available for the following motors:

1. Strap feeding
2. Strap take-up (feed backward)
3. Partial strap take-up
4. Strap tensioning

Menu – Machine parameters

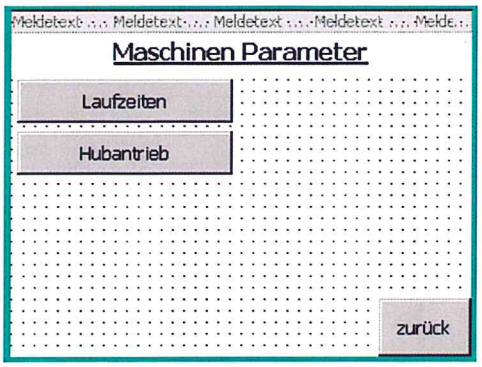

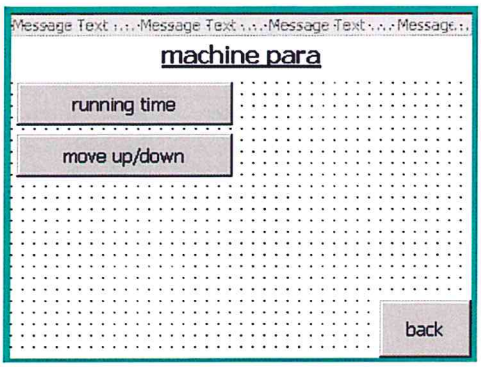

From this screen the following submenus can be accessed:

Running time: Monitoring parameters of the strapping machine
Move up/down: Parameter lifting/lowering speed

Menu – Runtime monitoring machine

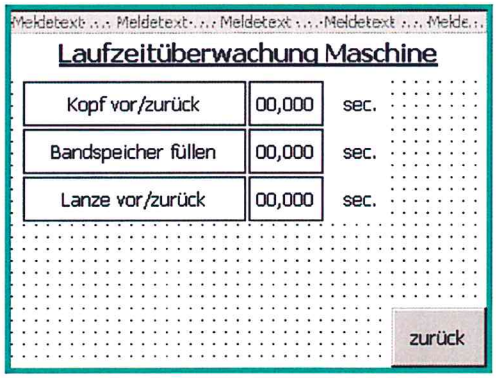

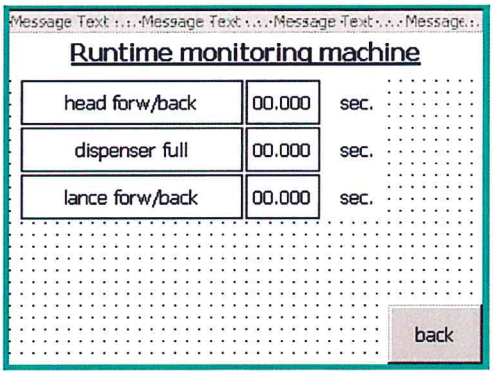

Head forw/backw
Max. timeframe for execution of the function until the function is interrupted and a fault message is displayed.

The same applies to all other functions.

Menu – Settings lifting/lowering (inverter drive)

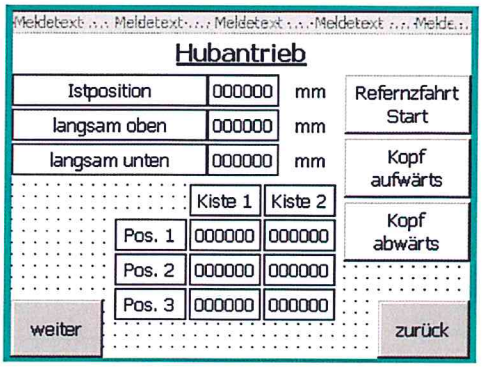

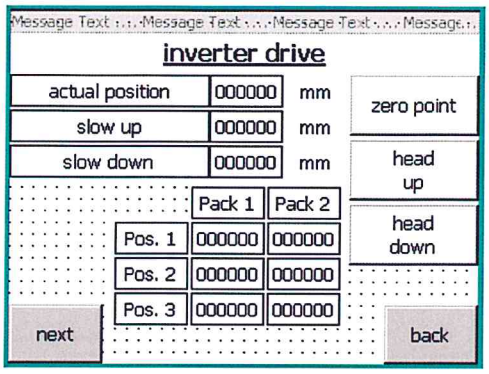

Actual position
Display of the actual position

Slowly up/down
Presetting of the switching to slow speed before reaching the target position.

Position 1 to 3
Setting of the strapping positions relating to the package size.

Reference run start
Starting the reference run. The reference point is defined by the home position (roller lever limit switch at top position).

Head up/down
Starting the up-/downward movement

Menu – Lifting / lowering speed

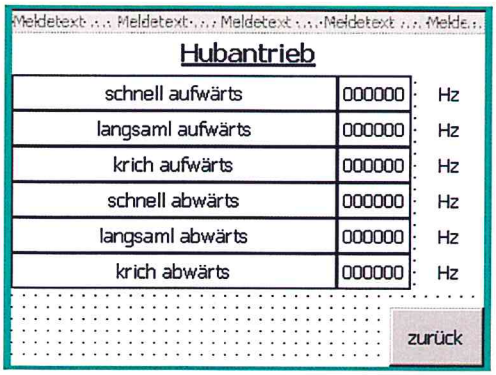

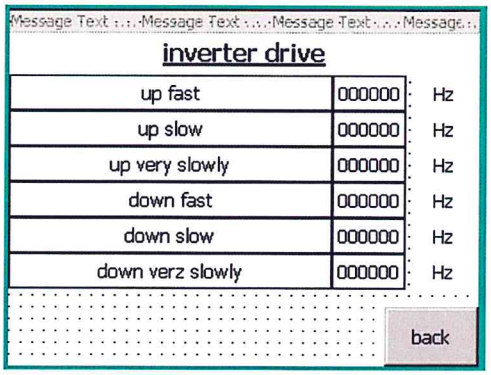

Setting of the lifting and lowering speed in Hertz.

Menu – Machine parameters (option)

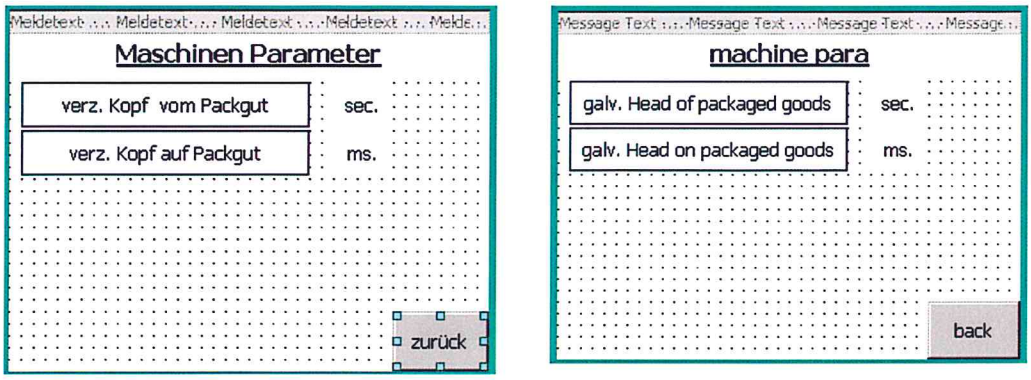

Delay head off the package (galv. Head of packaged goods)
Input of the delay time for stopping the head movement away from the package (for next positioning)

Delay head on the package (galv. Head on packaged goods)
Input of the delay time for stopping the head movement onto the package (for setting the gap between head and package)

Menu – OP parameters

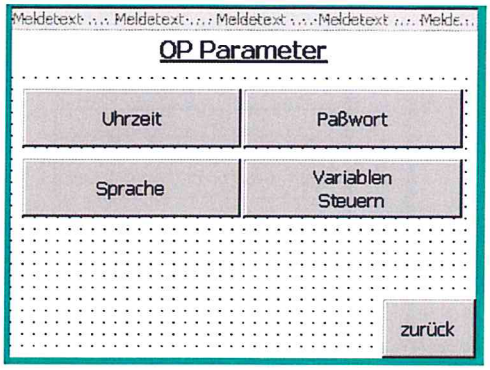

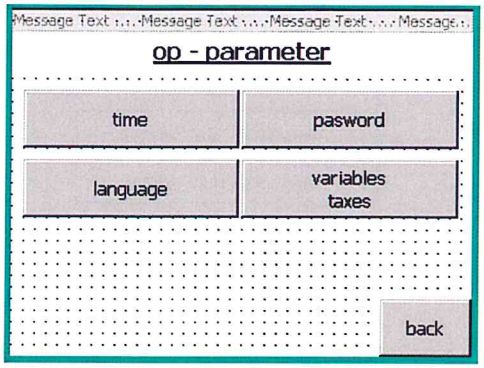

Time: Screen for input of date/time is opened.
Password: Modification of the password
Language: Language changeover
Variables control (variable taxes): Screen for control of selected variables

Menu – OP Time

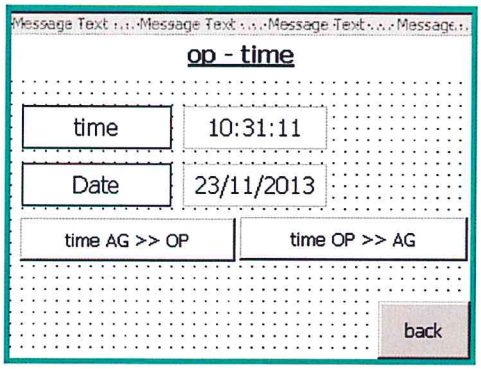

This menu serves to edit date / time.

Meaning of the function keys:
Time output device>OP – Date and time are loaded from PLC into the OP.
Time OP>output device – Date and time are loaded from OP into the PLC:

Menu – Password

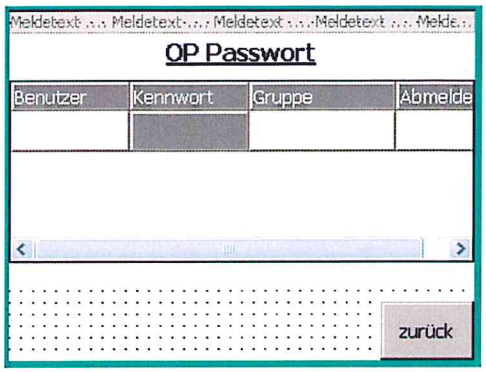

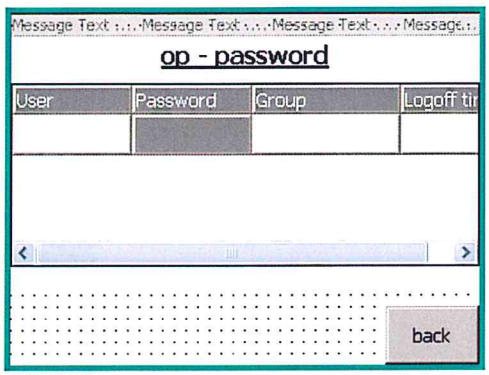

This menu serves to edit the passwords and to define their level.

Menu – Variable control

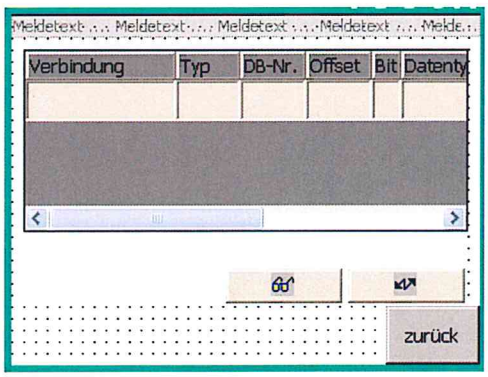

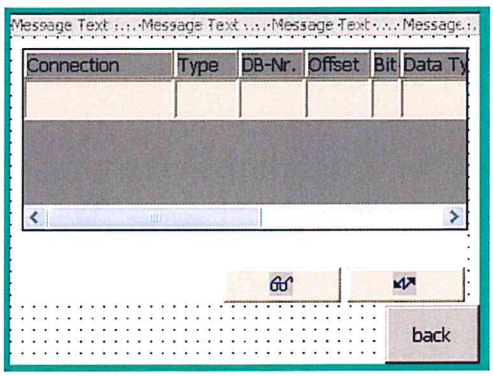

This screen serves as a means of trouble shooting. The variables to be controlled can be listed in the table.

Attention! This function may only be used by qualified personnel.

4.3.7. Operation of dispenser / accumulator

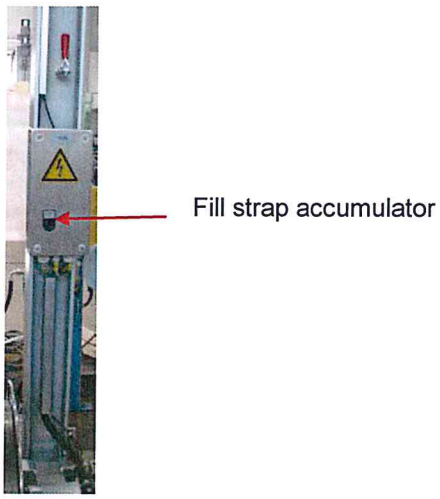

Fill strap accumulator
By pressing this button the strap accumulator is filled. When filling is completed the drive is stopped automatically.

4.3.8. Operation at the strapping head

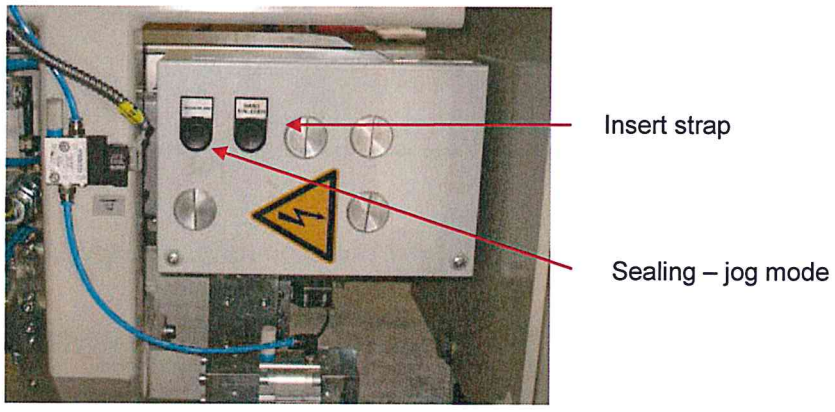

Insert strap
When pressing this button the strap clamp is opened for insertation of the strap.

Sealing – jog mode
Pressing the button activates the sealing motor (cam gear motor) as long as the button is pressed. After reaching the home position the motor is stopped.

Short pressing of the button moves the cam gear to the individual positions step by step.

4.3.9. Manual mode head / semi-automatic

The manual execution of the machine functions is described under the menus *"manual machine"* and *"manual head"*. These menus mainly serve to test the functions.

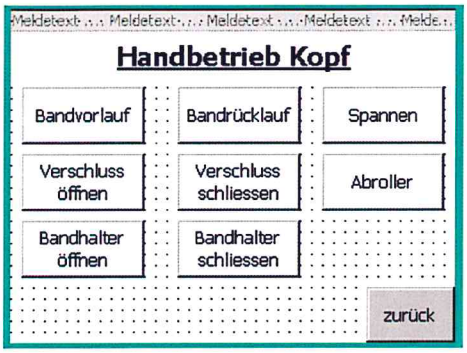

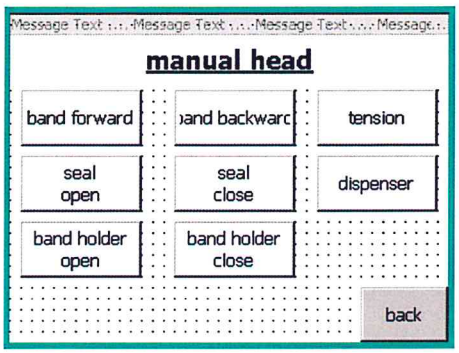

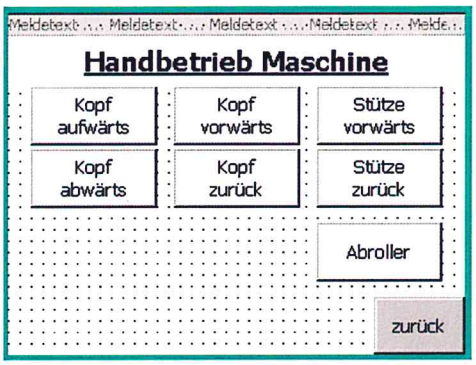

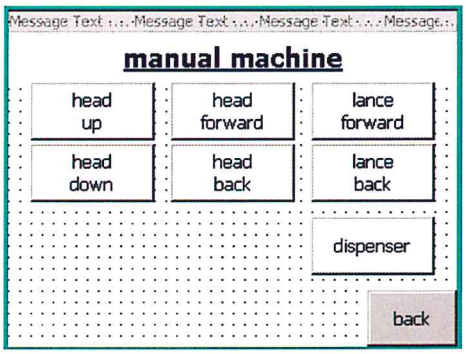

Manual operation / semi-automatic

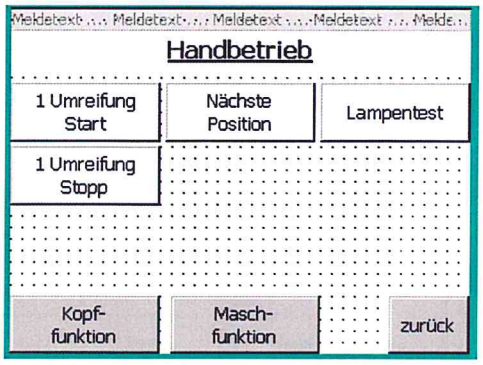

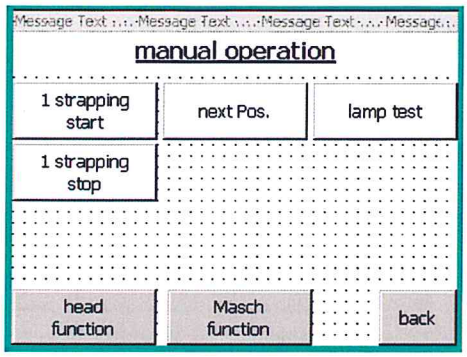

The manual start of a strapping cycle is possible in manual mode *(manual operation)*. Performing a complete strapping cycle requires the following steps / conditions:

1. Package in strapping position
2. Machine ready for operation – travel to home position
3. Selection "manual mode"
4. Performing the individual functions by means of the button **"1 strapping start"**

5. The cycle is stopped by the button ***1 strapping stop***.

Infeed and exit of a package is only possible with the machine in home position!

4.3.10. Automatic mode

1. Move machine to home position
2. Select automatic mode.
3. Start signal for the strapping cycle transmitted by the conveyor system.
4. Cycle started.
5. Exit of the strapped package.

4.3.11. Switch-off routines / emergency stop

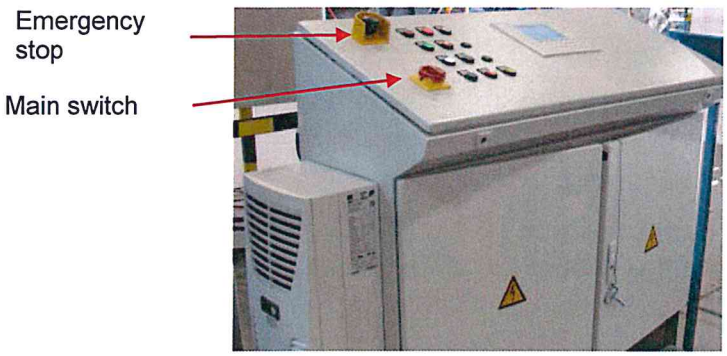

4.3.11.1. Switching off the machine by means of the main switch

- Move machine to home position.
- Deactivate control at the control console by the button *Control off*
- Switch the machine off by means of the main switch

4.3.11.2. Switching the machine off in emergencies by means of the emergency stop switch

In case of emergency the machine can be stopped by means of the emergency stop switches. All functions are stopped and the control is deactivated.

Caution! The control console is not de-energized.

4.3.12. Restart after intervention

- After trouble-shooting the emergency stop switch must be unlocked and the fault reset by the button "reset emergency stop".
- The emergency stop switch can be unlocked by a slight turn to the left side.
- Press illuminated push button „control ON“.
  Signal light "control ON" is on.
- In case of faults press the button "delete fault".
- Set key switch to operation mode "manual". The signal light is on.
- Press illuminated push button "home position run"
  The strapping machine is automatically moved to its home position.
  The illuminated push button "home position" is on when the home position has been reached.

The machine is in home position and ready for operation.

5. Trouble shooting and remedy

Warning!

In service mode:

Danger of cuts by the steel strap.

Danger when loosening the strapping. Strap may jump up when cutting it.

Danger of squeezing:

When the dancer rollers of the strap accumulator are in lifted position and the clamping of the strap is loosened, the rollers drop down.

Personal protective equipment:

Safety shoes, safety glasses, safety gloves, helmet.

Observe the instructions, keep strap accumulator filled.

Information!

Trouble-shooting and remedy must be carried out by adequately trained and qualified personnel only.

Training is adequate when:

- **the interrelations and sequences of the individual functions and movements are correctly understood,**
- **the initial (home) positions of all movements are known,**
- **the manual functions can be carried out in correct order,**
- **the interlocking conditions of all movements are understood,**
- **all fault- and malfunction messages are known.**

Caution! Danger to life!

When the machine / production line is completely switched-off for maintenance and repair it must be secured against unexpected re-start. Lock the main control devices, remove key and / or attach warning sign at the mains switch.

Secure the maintenance area, as far as required!

Caution! Danger to life!

After every retrofit, repair or modification of the machine it must be ensured that:

- **the protective equipment required for safety is active (light barriers),**
- **access to the danger zone is only possible through the protective fencing**

Caution! Danger to life!

Any work at the electrical installations or devices must only be carried out by a qualified electrician or by adequately trained persons under supervision of an electrician and in accordance with the prevailing regulations.

Caution! Danger to life!

Machines or components of the production line must be de-energized for inspection, maintenance and repair, if required. It must be verified that the components are de-energized. Then they must be earthed and short-circuited. Adjacent components which are live must be insulated and secured against re-start.

Caution! Danger to life!

The electrical installation of a machine / production line must be inspected / checked regularly. Any defects, such as loose connections or melted cables must be repaired immediately.

Caution! Danger to life!

When working on live components a second person must attend the work in order to actuate the mains switch or the emergency stop in case of emergency.
The working area must be secured by means of a red / white safety chain and a warning sign.
Use adequately insulated tools only!

Warning!

Particular attention must be paid to the electro-statically endangered components.
Damages to these components are avoided by proper use of the protective equipment and responsible observance of the regulations and instructions.

Warning!

When replacing fuses, only those of the same type, characteristics and voltage must be used.
For protection of electronic components special fuses are often used. In these cases particular attention must be paid to the choice of the replacement material.

Caution! Danger to life!

It is strictly prohibited to remove or bridge any protective equipment of the machine / production line.
Such equipment is amongst others adapter rings of screwed joints, motor protection switches, thermistors or software-based protection and locking systems.

Fault messages are displayed at the control console (OP).

General:

After a fault:

- Remedy fault.
- Reset fault by the button „Reset fault“.
- Move machine to home position.
- Release transport.

5.1. Fault messages

Fault	Cause	Remedy
01 - Motorschutz FU Hubantrieb 01 - Motor protection converter	Overload converter	Check motor Check travel path Check mechanical equipment Reactivate circuit breakers / motor protection
02 - Motorschutz Abroller 02 - Motor protection dispenser	Short circuit or overcurrent Circuit breakers Motor protection switch	Check outgoing circuits Remedy fault Reactivate circuit breakers / motor protection
03 - Redundanzmodul Input 1 03 - Redundancy Module Input 1	Fuse tripped Voltage too high	Check fuse Remove short circuit Check cables
04 - Redundanzmodul Input 2 04 - Redundancy Module Input 2	Fuse tripped Voltage too high	Check fuse Remove short circuit Check cables
05 - Redundanznetzgerät 1 05 - redundant power supply 1	Fuse tripped Voltage too high	Check fuse Remove short circuit Check cables
06 - Redundanznetzgerät 2 06 - redundant power supply 2	Fuse tripped Voltage too high	Check fuse Remove short circuit Check cables
07 - Störung Umrichter Hubantrieb 07 - inverter fault	Overload converter	Check motor Check travel path Check mechanical equipment Reactivate circuit breakers / motor protection
08 - Absicherung Fremdeinspeisung 230V AC 08 - Hedges (fuses) of foreign supply 230V AC	Circuit breaker tripped Leakage current too high	Measure current at outgoing circuits Reactivate circuit breaker
09 - Motorschutz Trafo 480V/230V 09 - Motor Protection Transformer 480V/230V	Overload, short circuit or overcurrent	Measure current Check settings Check cables Reactivate motor protection
10 - FI Schutzschalter Fremdeinspeisung 230V AC 10 - FI protection switch external power supply 230V AC	Fuse tripped Leakage current too high	Check fuse Measure current Remove short circuit Check cables
11 - Sitop Select 4 kanaliges Diagnosemodul 11 - 4 channel SITOP select diagnosis module	Fuse tripped	Check fuse Measure current Remove short circuit Check cables
12 - Not-Aus ausgelöst 12 - emergency stop	Emergency stop at the control console triggered	Reset emergency stop

16 - Sicherheitsbolzen gesteckt 16 - Put safety pins	Info	Place the locking bolt into the provided holder
18 - Zyklus Stop vom Transport 18 - Stop from transport	Stop signal via signal exchange with conveyor	Release transport (conveyor control)
20 - Bandmangel Abroller - Kein Band vorhanden 20 - Dispenser deficiency - no band available	No strap available	Reload new strap coil
21 - Bandmangel Abroller - Schlaufenturm oben 21 - Dispenser deficiency - loop tower (accumulator) above	No strap available	Check strap guide
22 - Laufzeitüberwachung Abroller 22 - runtime monitoring dispenser	Runtime monitoring tripped	Check limit switches Check switch function If required, extend timeframe
23 - Laufzeitüberwachung Kopfwagen - vor/zurück 23 - runtime monitoring head carriage - front / back	Monitoring timeframe exceeded	Check monitoring time Check mechanical equipment
24 - Laufzeitüberwachung Bandstütze 24 - runtime monitoring holder	Monitoring timeframe exceeded	Check monitoring time Check mechanical equipment
25 - Laufzeitüberwachung Hubantrieb 25 - runtime monitoring converter	Monitoring timeframe exceeded	Check monitoring time Check mechanical equipment
26 - Versorgung 220V Primär für 24VDC Maschine 26 - 220V primary supply for 24VDC machine	Circuit breaker tripped	Measure current at outgoing circuits Remedy fault Reactivate circuit breaker
27 - Versorgung 24V DC Maschine 27 - Supply 24V DC machine	Circuit breaker tripped	Measure current at outgoing circuits Remedy fault Reactivate circuit breaker
36 - Fehler Sicherheitslichtschranken Rahmen 36 / Error safety light curtains frame	Light barrier defective or no signal	Check light barrier and supply cable Adjust
37 - Druckluft nicht vorhanden 37 - Air not available	Info	Check air pressure Check setting of pressure switch

Fault messages after interruption of strapping		
100 - Schritt 1 Start abgebrochen 100 - Step 1 Start aborted	Cycle interrupted by the operator	Re-start
101 - Schritt 2 Fehler Schrittkette 101 - Step 2 Step Sequence Error	Internal fault	In case of frequent occurance call the TITAN customer service.
102 - Schritt 3 Fehler Kopf nicht in 0 Position 102 - Step 3 Error head is not in position 0	Head position not at O-position	Check sensor
103 - Schritt 4 Fehler Band nicht im Kopf angekommen 103 - Step 4 did not arrive error band in head (strap not inside head)	The strap is not fed into the strapping head within the preset timeframe. Possible cause: Strap guide channel, strap infeed, strap guides damaged or misaligned	Cut the strap by keeping the "0-position"-button pressed.
104 - Schritt 5 Fehler Rückmeldung Bandvorlauf Stop nicht vorhanden 104 - Step 5 error feedback preprocessing stop band does not exist (strap feed stop not available)	The strap does not reach the	Check mechanical equipment
105 - Schritt 6 Band nicht geklemmt 105 - Step 6 not clamped band	Sealing motor overrides the stop position	Check positioning sensor "head at package"
106 - Schritt 7 Fehler Bandführungsklappe nicht geöffnet 106 - Step 7 error band guide flap not open	Internal monitoring time	Check mechanical equipment
107 - Schritt 8 Fehler Bandführungsklappe nicht geöffnet 107 - Step 8 error band guide flap not open	Internal monitoring time	Check mechanical equipment Check sensors
108 - Schritt 9 Fehler Teilbandrücklauf 108 - Step 9 subband error return (error strap take-up)	Internal monitoring time	Check mechanical equipment

109 - Schritt 10 Fehler Kopf nicht am Packstück 109 - Step 10 fault not head to the package	Strapping head did not reach the package within the timeframe	Check positioning sensor "head at package"
110 - Schritt 11 Fehler Bandstillstand 110 - Step 11 fault band stoppage	Mechanical fault	Check mechanical equipment
111 - Schritt 12 Fehler Spannantrieb 111 - Step 12 fault tensioning drive	The tensioning motor does not tension properly.	Check tensioning motor
112 - Schritt 13 Fehler Spannkraft nicht erreicht 112 - step 13 does not reach error resilience (preset tension force)	The tensioning motor does not tension properly.	Check tensioning motor Check monitoring time setting
113 - Schritt 14 Fehler Verschlussantrieb 113 - Step 14 fault sealing drive	Motor blocking, Tensioning drive does reverse	Check sealing motor (cam gear motor) Check tension force setting
114 - Schritt 15 Fehler Spannantrieb läuft nach 114 - Step 15 errors is to drive runs (motor stop delay)	Strap torn Incorrect strapping head setting	Start new strapping cycle Check tension force setting
115 - Schritt 16 Fehler Verschluss nicht in 0 Position 115 - Step 16 fault closure is not in position 0 (seal not in position)	Sealing motor (cam gear motor) not in home position	Check position encoder "0-position" of the cam gear motor
116 - Schritt 17 Fehler Zähler wurde nicht gelöscht 116 - Step 17 error counter has not been cleared	Internal fault	In case of frequent occurance call the TITAN customer service.
117 - Schritt 18 Fehler Bandrichten startet nicht 117 - Step 18 Align error band does not start	Internal fault	In case of frequent occurance call the TITAN customer service.
118 - Schritt 19 Fehler Bandrichten nicht beendet 118 - Step 19 Align error band is not finished	Strap straightening could not be terminated.	Check sensors at the counter disc
119 - Schritt 20 Fehler Bindekopf am Paket 119 - Step 20 fault binding head on package	Internal fault	Check mechanical equipment

120 - Schritt 21 Fehler Bandführungsklappe nicht geschlossen 120 - Step 21 fault belt guide cover is not closed (strap guide flap not closed)		Check mechanical equipment
121 - Schritt 22 Fehler Bandführung nicht geschlossen 121 – step 22 – fault strap guide not closed		Check mechanical equipment
122 - Schritt 23 Fehler Bandrichten nicht beendet 122 - Step 23 Align error band is not finished		Check mechanical equipment
123 - Schritt 24 Schrittkette nicht beendet 123 - Step 24 step sequence not finish	Internal monitoring time	Check mechanical equipment

6. Service and maintenance

Warning!

Danger of cuts by the steel strap.

Danger when loosening the strapping. Strap may jump-up when cutting it.

Danger of squeezing:

When the dancer rollers of the strap accumulator are in lifted position and the clamping of the strap is loosened, the rollers drop down.

Personal protective equipment:

Safety shoes, safety glasses, safety gloves, helmet.

Observe the instructions, keep strap accumulator filled.

Information!

Service and maintenance of the TITAN strapping machine must only be carried out by personnel with professional training in mechanical or electrical engineering.

Furthermore these personnel must be adequately trained in the machine functions:

Training is adequate when:

- **the interrelations and sequences of the individual functions and movements are correctly understood,**
- **the initial (home) positions of all movements are known,**
- **the manual functions can be carried out in correct order,**
- **the interlocking conditions of all movements are understood,**
- **all fault- and malfunction messages are known.**

Information!

For maintenance the machine must be switched-off at the mains switch and secured against re-starting.

6.1. General

The strapping machine can only be kept constantly ready for operation by regular and careful maintenance.

1. Always keep the machine in clean condition.
2. Keep guiding devices, channel system, strap guides, strap accumulator, dispenser and the sealing zone free from contamination and foreign matter.

TITAN strapping machines are pre-lubricated by the manufacturer. This applies to all bearing points or resp. guiding devices as far as they require lubrication.

For re-lubrication of roller bearings and linear roller bearings we recommend high-quality pressure-proof bearing lubricant, preferably lithium saponified lubricant of consistency class NLGI 2 acc. to DIN 51818.

The lubrication intervals are approx. 2 – 3 months depending on the application conditions.

The lubricant quantity depends on the size of the lubrication point. In principle, however, lubricant must be refilled until it emerges visibly.

For lubrication of chain drives always use low viscosity-lubricant NLGI 1-2.

Information!

For maintenance of the strapping head please refer to the separate Operating Instructions.

6.2. Maintenance of the TITAN strapping machine

Information!

Attach an additional sign at the control console when carrying out maintenance work:

Caution!

Do not start! – Maintenance being undertaken!

Warning!

Secure the mains switch by U-lock against unintended or negligent re-start of the machine.

Caution! Danger of life!

Machines or components of the production line must be de-energized for inspection, maintenance and repair, if required. It must be verified that the components are de-energized. Then they must be earthed and short-circuited. Adjacent components which are live must be insulated and secured against re-start.

Caution! Danger of life!

Any work at the electrical installations and devices must only be carried out by qualified electrician or by adequately trained persons under supervision of an electrician an in accordance with the prevailing regulations.

Intervals	*Location*	*Task*	*Lubricant*
Every 300 hours of operation, for 3-shift operation every 2 weeks	Air service unit (filter regulator)	Pressure check, drain water separator	
	Pneumatic components	Leak test	
	Strap feed	Visual check of all deflection rollers for damaged edges, cuts and for smooth running	
Every 600 hours of operation, for 3-shift operation monthly	All rollers and guide rails	Clean and lubricate rollers and guide rails	
	Channel system	Visual check of all flaps for cuts, cracks or deformation which may impair the function of the channel flaps. Clean the strap running surfaces. Check all flaps for easy opening.	
	Linear bearings, roller bearings	Clean and lubricate	lithium saponified lubricant of consistency class NLGI 2 acc. to DIN 51818
	Chain drives	Clean and lubricate	low-viscosity lubricant NLGI 1-2 acc. to DIN 51818
	Gear wheels/ gear rods	Clean and lubricate	lithium saponified lubricant of consistency class NLGI 2 acc. to DIN 51818

Observe the maintenance instructions as well as the safety precautions of the component manufacturers.

Do not use any toxic coolants or lubricants with the machine.

During all phases of operation life any operating and display elements must be checked for permanently glare-free illumination. Remedy, if required.

Any signs and markings at the machine must be kept well-legible.

The operator company must ensure that the environmental conditions

6.3. Spare and wear parts

For the spare and wear parts to be used for the TITAN strapping machine please refer to the attached files (see chapter 8).

7. Decommissioning, dismantling, disposal

When decommissioning the machine the components must be material-sorted and disposed of according to the environmental standards. Observe national and international standards!
Disposal of any machine parts must comply with the local environmental regulations!

For disposal of auxiliary materials, working materials and consumables the requirements specified in the data- / safety data sheets must be fulfilled. These data sheets will be included by the suppliers of such materials.

Information!

Grease and lubricants or waste containing grease or lubricants represent considerable hazard to the environment. They must be disposed of according to the local environmental standards.

Caution! Danger to life!

This machine is equipped with a lockable mains switch (acc. to VDE 0113) which is secured by a U-lock against inadmissible machine start. The operator / owner of the machine must ensure that the mains switch is secured by an adequate lock, that the key is in safekeeping and that authorized responsible persons only gain access to that key.
If required, the machine must be secured against inadmissible operation as described above.

8. List of annexes

1.	Operating and maintenance instructions strapping head VS11-L	B02_11DE14_13_0003
2.	Spare parts list strapping head VS11-L	E02_11EU28_13_0003
3.	Operating instructions ABS "strap dispenser unit"	B702DE07_11
4.	Spare parts list ABS "strap dispenser unit"	E702DE11_11
5.	Spare parts list ARS "strap dispenser"	E604DE11_11
6.	Spare parts list BSC "strap accumulator"	E615EU11_11
7.	Machine parts list	454W001335
8.	Machine parts list	454X001881
9.	Machine drawings:	
	Layout drawing VS11-H	4549000756
	Assembly drawing VS11-H	4548000496
	Strap guide channel	4547001172
	Carriage	4547001173
	Machine frame	4547001179
	Strap clamp unit	4547000574
	Pneumatic diagram	4545000387
10.	Electric documentation	separate folder

Operating Instructions

-Translation of the original instructions-

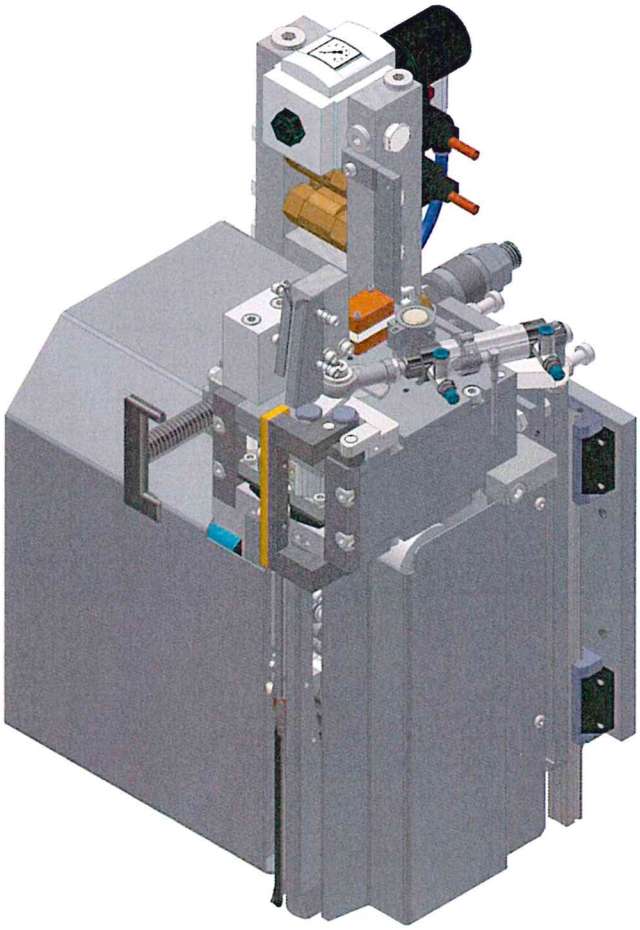

VS 11-L

01 0003

Pneumatic strapping head for steel strap

Important!
The customer agrees to make these operating
Do not throw these operating instructions away.
instructions understandable to all operating and
service personnel.

TITAN
Wir halten zusammen

Table of contents

Page

1. Manufacturer details 3
2. General 4
3. Safety regulations 7
4. Life phases of the unit 9
5. Technical data 11
5.1. Dimensions and assembly dimensions VS 11-L 12
5.2. Pneumatic equipment (head control) 13
5.3. Strap 14
5.4. Smallest supporting surface with different packing items 15
5.5. Calculating time (just functions of the head) 16
5.6. Air consumption VS 11-L 17
6. Designations 18
6.1. Actuating magnets 18
6.2. Limit switches 18
6.3. Motors 18
6.4. Cylinder 19
6.5. Pressure reducer 19
6.6. Adjustments 19
6.7. Functions of switches 20
6.8. Position of the switches, valves, pressure controllers and motors 21
7. Functional description 22
7.1. Inserting the strap 22
7.2. Strap feed – fast speed 22
7.3. Strap feed – precision speed 23
7.4. Closing strap clamp 1 23
7.5. Return movement of strap 23
7.6. Lowering tensioning slide, tensioning the strap 23
7.7. Formation of a seal, cutting the end of strap, releasing the seal, aligning 24
7.8. Head backward, closing of strap guiding flap 24
7.9. 0–Position 25
7.10. Strap stop edge 26
7.11. Sealing 26
7.12. Functional diagram 27
8. Settings 28
8.1. Setting the switches B 1 to B 8 28
8.2. Setting the zero position 28
8.3. Setting the strap stop edge 29
8.4. Setting the aligning rolls 30
8.5. Setting air pressure 31
9. Maintenance 33
9.1. General 33
9.2. Maintenance intervals 34
9.3. Lubrication points 34
9.4. Maintenance transport unit 36
9.5. Maintenance of the aligning device. 37
9.6. Maintenance cutter package 38
9.7. Dismounting and mounting the sealing unit 40
10. Search for faults – troubleshooting 41
11. Declaration of incorporation 42

1. Manufacturer details

TITAN Umreifungstechnik GmbH & Co KG

Berliner Str. 51 – 55
58332 Schwelm
Germany

Tel.: +49 (2336) 808–0
Fax: +49 (2336) 808–208
Email: info@titan-schwelm.de
Web: www.titan-schwelm.de

Pneumatic strapping head for steel strap "No-Seal-Joint"

2. General

Thank you very much for your confidence in the technology of TITAN Umreifungstechnik.

These operating and maintenance instructions are meant to facilitate how to become acquainted with the strapping machine and apply it as intended. The operating instructions comprise important information on how the strapping machine can be used safely, as intended und economically.

The operating instructions must permanently be available at the place the strapping head is used. They must be read and applied by all staff members working with the strapping head. Such works especially include operation, troubleshooting and maintenance. Adjustment and maintenance works may only be performed by trained technical staff.

Explanatory notes on the warning and instruction symbols:

Caution!
Used where there is danger to life and health.

Warning!
Used for danger which cause material damage.

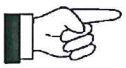

Note!
Used for general information and information which if not followed can cause faults in the operating sequences.

The item numbers (...) and designations used in these operating instructions refer to the spare parts list or documentation on the electrical system.

Copyright © TITAN Umreifungstechnik GmbH & Co.KG 2011 all rights reserved.
The contents of this document must not be duplicated, handed to third parties, published or saved in any form, neither fully nor partly, without prior written permission by TITAN Umreifungstechnik GmbH & Co.KG.
TITAN is a registered trademark of TITAN Umreifungstechnik GmbH & Co.KG.

- **Intended use**
  This strapping head is intended for installation in different strapping machines. The strapping head is meant for the strapping of slit coils, sheet packages, bricks, structural timber, bundles of sections etc.

- **Unintended use!**
  Strapping material must not be used for the hoisting of loads; this strapping head may only be used as intended and specified above.

- The strapping head **VS 11-L** meets the German and European safety requirements and complies with the provisions in the following **EU directives**:

  See declaration of incorporation.

- The **VS 11-L** connects modern drive and control technology with the state of the art in proven sealing technique without sleeves.

- Three pneumatic motors and three compressed air cylinders perform all strapping head functions.

- All functions are triggered by solenoid valves. The valves are equipped with actuating magnets 24 V DC (DC voltage).

- The mains voltage for the **VS11-L** must be 400 V 50 Hz.

- The seal of the **VS 11-L** has three punching's.

- The seal stability of the seal without sleeves is up to 85 % of the load at rupture of the strap (depending on strap quality and dimension).

- The gentle transport of strap is affected by means of large strap transporting rolls. The surface of the strap remains undamaged. Mangle rolls installed provide for a trouble-free strap circulation.

- Adjustable strap tensions ranging from 1500 N to10 000 N permit good adaptation of the strapping to the packing items.

- The strapping head is provided with an adjustable floating movement (movement forward of the head against the tensioning direction) permitting the strapping of the packing item without damage to the edges even at high strap tension.

- A slight tilting movement within the floating movement permits a good adaptation to the packing item without a loss of tension (the strapping head is drawn nearer to the packing item by means of the final tension).

- The mechanical connection of the strapping head with the machine is implemented on the locating surface of the floating movement by means of four M10 screws. Electricity and compressed air are provided with a detachable quick-acting coupling.
- After loosening the four screws and the disconnection of the electricity, gas and compressed air ports the head can be replaced quickly and without problems.

- The **VS 11-L** unit processes steel strap for packing items of the widths:

  13, 16, und **19** mm.

- Strap thickness can range from: **0.5** to **0.63** mm

- The compressed air used must be dewatered, filtered and oiled. The air pressure (flow pressure with transport motor being switched on) should be **5** bar.

- Maximum air flow rate 18 l / s.

- Air consumption per strapping operation approx. 0.1 to 0.2 m³ (depending on channel size).
  Air consumption per motor 1.1 m³ / minute.

- The cross section of the feed line port should not be below **G3/4"**.

Attention!
It is not possible to use plastic strap with those heads!

3. Safety regulations

The area in which strapping is carried out with steel strap is a danger zone and must be secured in accordance with DIN EN ISO 13857!

The user manual must be read prior to operations of the strapping head.
Read all instructions carefully.

Operations of the strapping head (machine) by unauthorized personnel are forbidden.

It is urgently required that all safety and warning notes are followed, we especially refer to the **EU Machine Directive**.

Testing in accordance with **EN 60204-1** must be performed on the strapping head "as installed".

The operating staff must be instructed precisely and made familiar with the handling of the strapping head before operating the strapping head for the first time.

The strapping head may only be positioned and put in operation in closed and dry rooms.

Operating the strapping head is appropriate in the temperature range 0°C to +40°C.

Do not deposit containers with liquids on the strapping head. No liquid must be allowed to penetrate the strapping head.

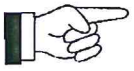

No persons or objects must stay in the area of operation of the strapping head before the latter is put in operation.

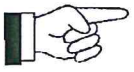

Protective installations, covers and linings of the strapping head must be checked before activation. They must neither be loose nor have been removed.

Do not let your hands get into the channel area and below the packing items during the strapping operation. **Attention! Risk of squeezing!**

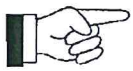

Before the beginning of leaning works and/or troubleshooting the strapping head must be put out of operation.
Main switch at position OFF.

Attention! Strap may tear! Do not stand in the alignment of the strap.

Wear eye and face and hand protection when eliminating fault strapping.

When cutting the strap hold the upper parts firmly (see figure). **Attention!** The lower part of the strap jumps upward.

Consider the strong development of noise during longer operations. Therefore, protect your health.

Exclusively **use** original **TITAN spare parts only!** The use of spare parts not made by TITAN excludes guarantee adjustments and liability.

In automatic mode attention has to be paid that no squeezing points may occur between the feeding installations (e.g. roller conveyors) and the movable strapping unit.

We do not accept liability for alterations to the strapping machine! Further, warranty/guarantee and these operating instructions become inapplicable.

4. Life phases of the unit

Transport:

The transport of the strapping head has to be realized with an hoisting device.
Attention! Do not stay beneath the load during lifting and depositing. Order individuals which stands in the hazardous area to leave it. Minimum carrying capacities see technical data on p. 10.

Putting the unit in operation:

The strapping head may be put in operation by trained technical staff only.

Setting, programming:

Setting and programming works related to the strapping head may only be performed by trained technical staff.

Operation, modes:

Manual mode:
Manual mode permits the implementation of individual works performed for testing and troubleshooting. Further, manual mode is applied to take the strapping head to home position.

Attention!
During the touch control of the cam gear there is a risk of squeezing at the counter plate.

Automatic mode:
Automatic processing of all movements.

Attention!
In automatic mode attention must be paid that no points with the risk of squeezing may occur between the feed installations (e.g. roller conveyors) and the movable strapping head.

Cleaning, maintenance, repairs:

Just trained technical staff is allowed to perform maintenance and repair works on the strapping unit.

Attention! Before beginning with any maintenance work the relevant staff must disconnect the strapping head from the power mains.

Attention! Wear protective glasses when cleaning the head / machine with compressed air.

Putting the head out of operation, disassembly:

Attention!
When dismounting the strapping machine there is the risk of squeezing.

Attention!
Do not stay beneath the load during lifting and depositing. Order individuals which stands in the hazardous area to leave it.
Minimum carrying capacities see technical data p. 10.

Waste disposal:

If packing material is to be disposed of, take it to the relevant recycling container or admit it to the Dual System.

Should the strapping machine have to be disposed of at the end of its service life, separate plastic material, steel and aluminium and dispose of such materials separately. In the same way, motors and electric modules like control system, switches and cables must be admitted to separate waste disposal. Take such elements to the appropriate waste management.

5. Technical data

Typ VS 11-L:	**incl. 3 punchings** for light straps of 13 x 0.5 to 19 x 0.63 mm Megaband
Kind of drive:	Electro-pneumatic, 3 motors and 3 cylinders
Strap transport speed:	approx. 2.2 m/s with strap thickness 0.5 mm approx. 2.0 m/s with strap thickness 0.63 mm
Strap tensions:	1,500 N to 10,000 N adjustable
Kind of seal:	without sleeve – triple punching
Rupture at load of seal:	approx. 75-85% of the rupture at load of strap (depending on strap quality and dimensions)
Weight:	120 kg
Noise emission:	The noise intensity level acc. to DIN 45635, part 27 is 85 dB (AS)
Air pressure:	max. 6 bar flow pressure
Air flow rate:	17 l / s
Air consumption:	approx. 0.1 to 0.2 m³ per strapping operation
Cross section of port:	G 3/4“
Dimensions:	700 x 400 x 600 mm (L x W x H)

5.1. Dimensions and assembly dimensions VS 11-L

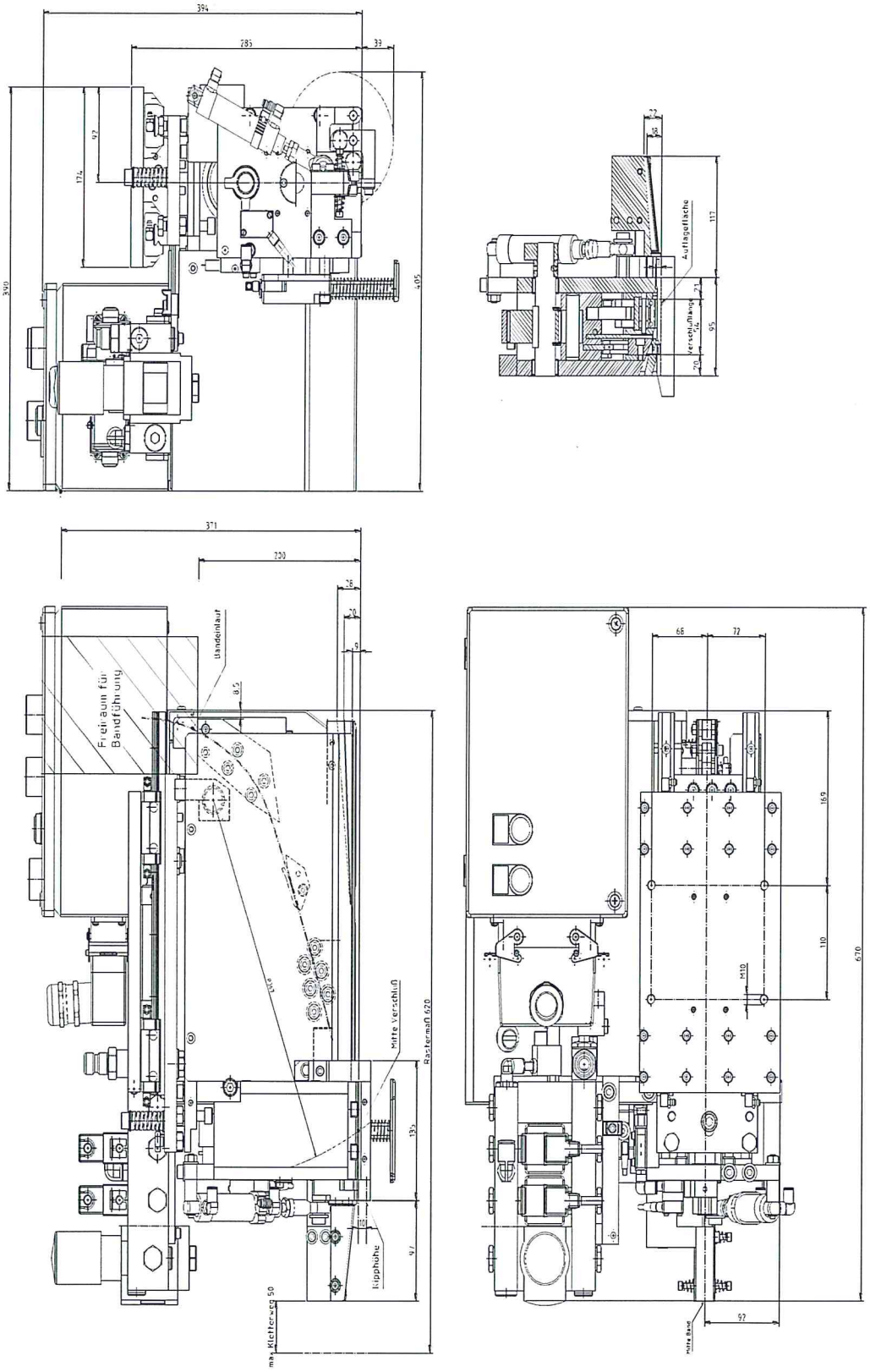

5.2. Pneumatic equipment (head control)

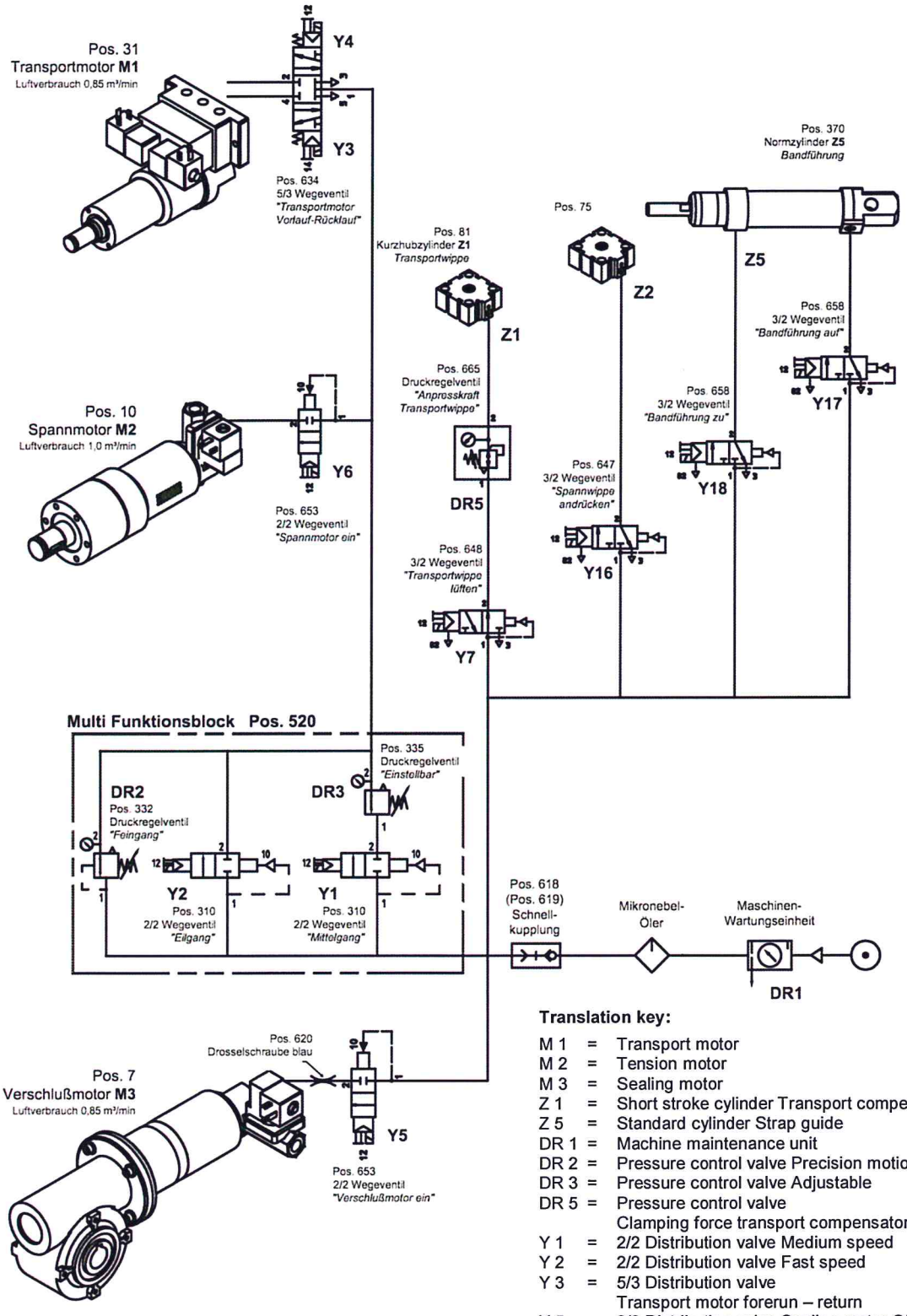

Translation key:

M 1 = Transport motor
M 2 = Tension motor
M 3 = Sealing motor
Z 1 = Short stroke cylinder Transport compensator
Z 5 = Standard cylinder Strap guide
DR 1 = Machine maintenance unit
DR 2 = Pressure control valve Precision motion
DR 3 = Pressure control valve Adjustable
DR 5 = Pressure control valve Clamping force transport compensator
Y 1 = 2/2 Distribution valve Medium speed
Y 2 = 2/2 Distribution valve Fast speed
Y 3 = 5/3 Distribution valve Transport motor forerun – return
Y 5 = 2/2 Distribution valve Sealing motor ON
Y 6 = 2/2 Distribution valve Tension motor ON
Y 7 = 3/2 Distribution valve Ventilation transport compensator
Y 16 = 3/2 Distribution valve Press on tension compensator
Y 17 = 3/2 Distribution valve Strap guide open
Y 18 = 3/2 Distribution valve Strap guide closed

Schnellkupplung = Fast coupling
Mikronebel-Öler = Fine mist oiler
Drosselschraube blau = Throttle screw blue
Multi-Funktionsblock = multi-functional block

5.3. Strap

	Dimensions:	**3 punchings**		
⊘	Width:	13, 16, 19 mm		
⊘	Thickness:	0.5 – 0.63 mm		
	Quality:	**N/mm²**		**sealing strength**
⊘	Automaten:	800		≥ 75 %
⊘	Megaflex:	800		≥ 75 %
⊘	Mega:	1100		≥ 75 %
⊘	Niro:	1200		≥ 75 %
	Surface:			
⊘	Unpainted:	bright / blue		slightly coated with wax
⊘	Painted:	galvanized	or	painted with zinc powder

5.4. Smallest supporting surface with different packing items

Expansive package
120 mm

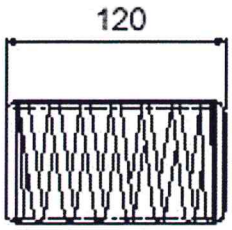

Slit coil
120 mm

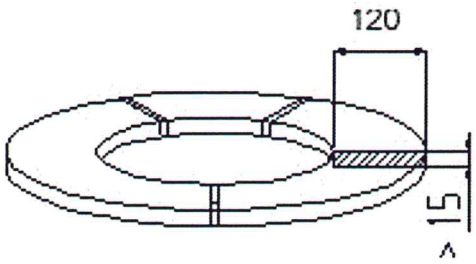

Hexagonal pipe bundle
140 mm

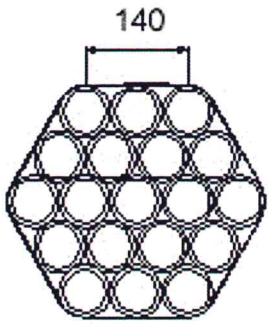

Round packing item
Ø 500 mm

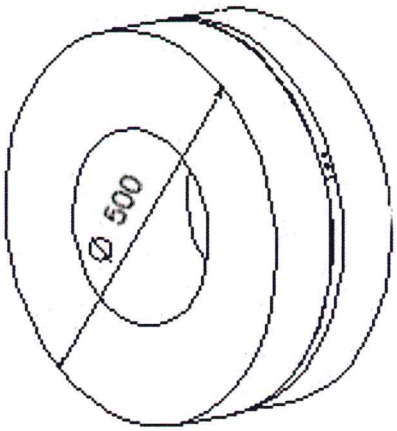

5.5. Calculating time (just functions of the head)

Example for **VS 11-L** cross section of strap 19 x 0.63 mm

F1	Strap feed	$= \frac{\text{Channellength}}{\text{Conveyingspeed}} = \frac{4.5\text{m}}{1.8\,^{\text{m}}/_{\text{s}}} + 1\text{s} =$		3.5 s
F2	Fixed time Clamping strap Strap guiding flap open	=		0.5 s
F3	Strap return	$= \frac{3.2\text{m}}{1.8\,^{\text{m}}/_{\text{s}}} =$		1.8 s
	Head forward	=	e.g.	2.0 s
F4	Tensioning strap	$= \frac{50\text{mm}}{200\,^{\text{mm}}/_{\text{s}}} + 0.3\text{s} =$		0.55 s
F5	Fixed time Seal formation Cutting end of strap Releasing seal	=		1.5 s
F6	Head return	=	e.g.	1.0 s
	To head before packing item B7 Swing in strap guide flap Fixed time			0.3 s

Total time: $\sum$ **11.15 s**

5.6. Air consumption VS 11-L

All compressed air motors consume the same amount of air.

Consumption of compressed air 1.1 m³/min = 18 litres /s at 6 bar.

Cross section of port **R¾"**

- **Seal:** Sealing time 2.2 s = Air consumption **40** litres
- **Tensioning motor:** Tensioning time approx. 3.0 s = Air consumption **54** litres
- **Transport:** Select transport speed acc. to strap thickness (2.2 / 2.0 / 1.8 or 1.6 m/s)

Transport feed = $\frac{\text{Channel size in m}}{\text{Strap speed}}$ x 18 l

Transport return = $\frac{\text{Channel size in m}}{\text{Strap speed}}$ - Circumference of packing item x 18 l

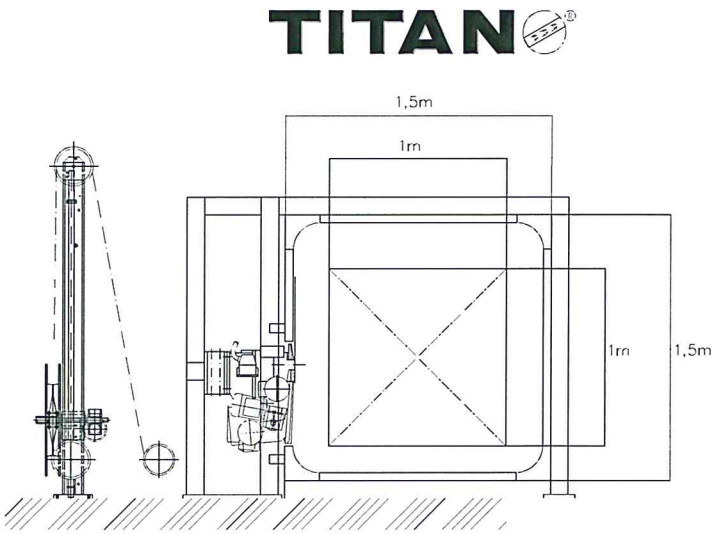

Example:
Channel size 1.5 x 1.5 m = **6m**
Size of packing item 1.0 x 1.0 m = **4m**
Strap thickness 0.63 mm = **1.8 m /s** strap speed

$\frac{6\text{ m x }18\text{ l/s}}{1.8\text{ m/s}}$ = 60 l for channel feed

$\frac{6\text{ m} - 4\text{ m x }18\text{ l/s}}{1.8\text{ m/s}}$ = 20 l for transport return

Tensioning	54 L
Sealing	40 L
Transport	80 L
	174 l consumed standard air per strapping operation

6. Designations

6.1. Actuating magnets

Air valve throttled	Y 1	
Air valve unrestricted	Y 2	
Transport motor forward	Y 3	
Transport motor backward	Y 4	
Sealing motor	Y 5	
Tensioning motor	Y 6	
Transport slide	Y 7	
Head forward	Y 13	at the machine
Head backward	Y 14	at the machine
Tensioning slide pressed	Y 16	
Strap guiding flap open	Y 17	
Strap guiding flap closed	Y 18	

6.2. Limit switches

Strap Stop switch	B 1	
Counter switch	B 2	
0 position	B 3	
Position switch k	B 4	
Safety switch	B 6	
Head before packing item	B 7	
Head on packing item	B 8	
Service – switch insertion of strap	B 9	
Service – switch seal	B 10	
Floating package front	B 12	option
Floating package back	B 13	option
Start precision movement	B 14	(in the channel)
Head rear	B 15	
Head front	B 16	
Accumulator full	B 17	
Accumulator empty	B 18	
End of strap	B 19	

6.3. Motors

Transport motor	M 1	
Tensioning motor	M 2	can be attenuated
Sealing motor	M 3	

6.4. Cylinder

Transport slide	Z 1
Tensioning slide	Z 2
Strap guiding flap	Z 5

6.5. Pressure reducer

Main maintenance unit	Fast movement	Strap tension max.	DR 1
Multi-valve block	Precision movement	Strap tension min.	DR 2
Multi-valve block	Strap transport	Strap tension	DR 3
Valve bank	Strap transport	Transport slide	DR 5

6.6. Adjustments

Adjustments: **Definition of term:**

Strap tension adjustable		$Y_1 - Y_2$
Pulses for aligning of strap	(B2)	Pulses aligning of strap
t1 tensioning strap	OFF	Tensioning OFF
t7 if B 14 not available		Starting precision movement
t9 control time strap stop		End strap feed

Monitoring operating time:

Feed / Return / Tensioning

6.7. Functions of switches

B1 Strap into head

Initiates the precise movement of the beginning of strap into the sealing unit for strap overlap.

B2 Counter switch

Monitors the contact between conveyor roll and strapping material and thus prevents any slipping of the conveyor roll.
Switches from return transport to tensioning.

B3 0-Position

Defines the 0-Position of the cam gear.

B4 Position switch K

Stops the cam gear at clamping position.

B6 Strap guide opened

Monitors the mechanically opened position of the strap guide flap.

B7 Head in front of packing item

Signals „head in front of packing item"
Switches the movement „Head in front of" of the machine to precise motion and following the release of the seal it activates the cam gear for movement to the 0-position.

B8 Head on packing item

Signals „Head on packing item", triggers the fast return transport of strap or strap tensioning.

B9 Strap forward motion

Permits the strap forward motion in manual mode to insert the strapping material.

B10 Seal

Permits the information of a seal in manual mode.

6.8. Position of the switches, valves, pressure controllers and motors

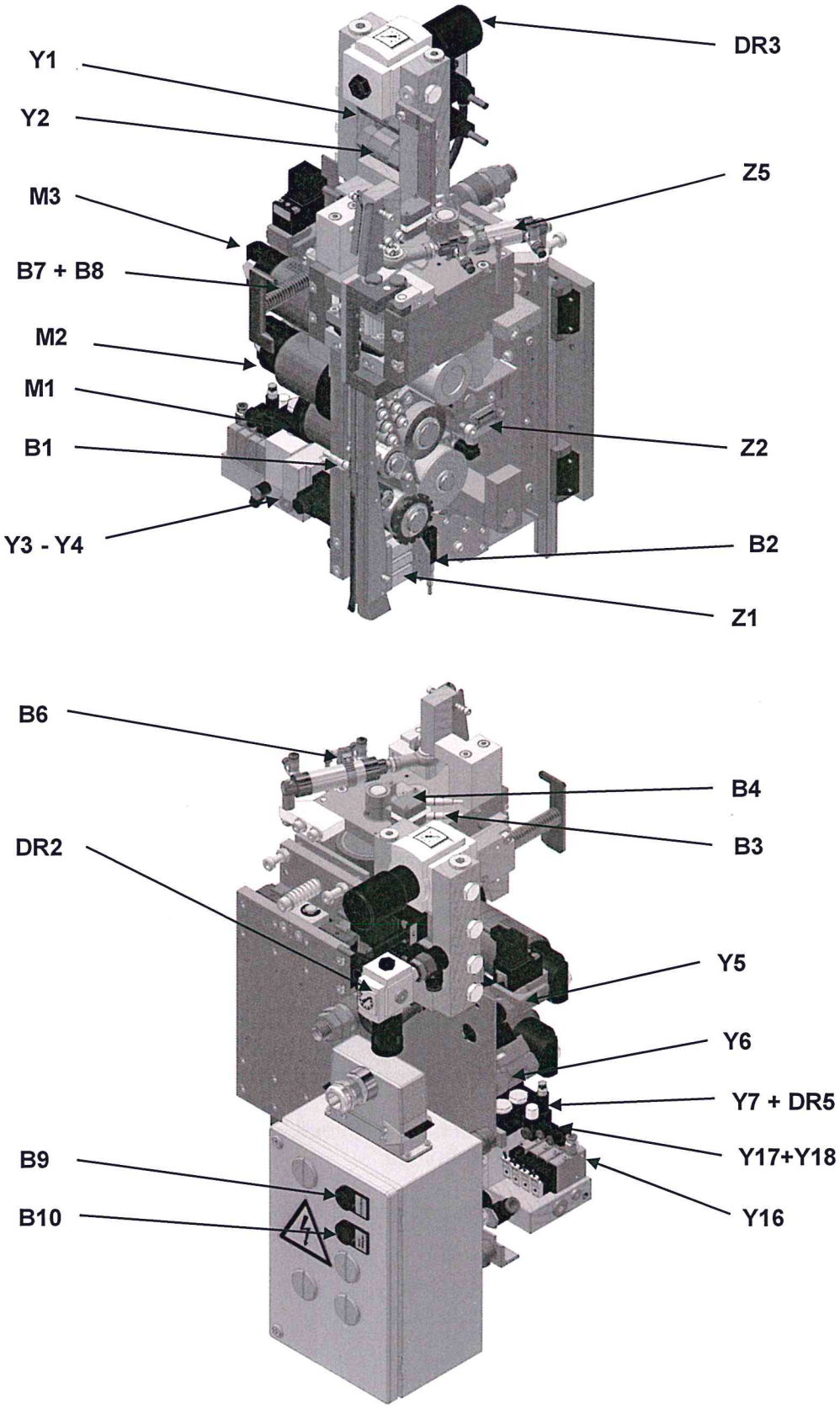

7. Functional description

7.1. Inserting the strap

Before the strap is inserted into the **TITAN strapping head VS 11-L** it must be assured that the end of the strap is with a clean, straight cut. Press switch **B9** and slip the beginning of the strap into insertion opening **118**.

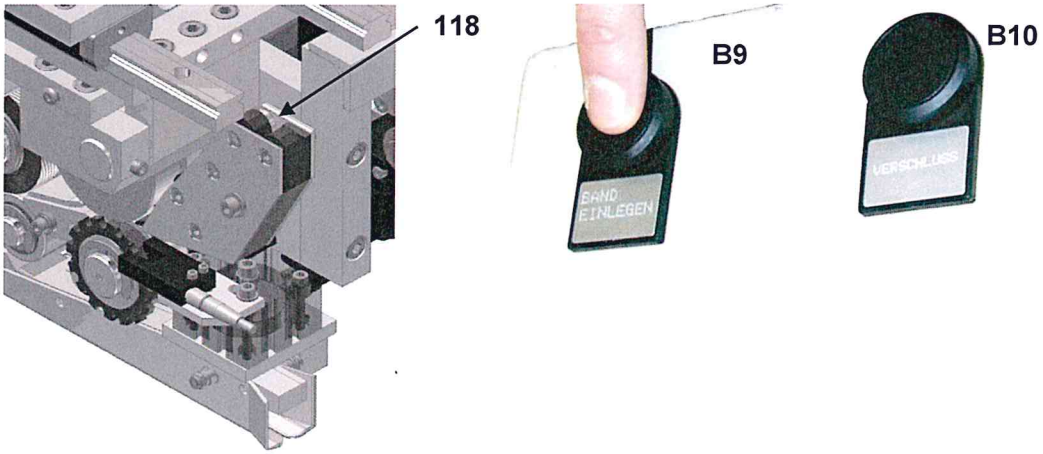

Attention!
Wear gloves when inserting the strap!

7.2. Strap feed – fast speed

A **start signal** switches on the transport motor **M 1**, which drives the feed roll **42** feeding the strap at a speed of about 2.0 m/s through the strap channel until it reaches strap stop lever **B1**. A timer is started simultaneously (strap feed control) which interrupts strap transport if the maximum strap transport time is exceeded (strap breakage or obstructions in channel).

Strap feed can also be reduced under certain conditions (small channel etc.) by means of an early deactivation (with timer or switch) before the strap stop switch **B1** has been contacted in order to achieve constant, accurately repeatable strap feed.

Straps which are excessively bent can be pre-shaped with the integrated aligning device which provides for faultless strap feed.

For adjustments to the aligning device see section **4**, "Adjustments".

7.3. Strap feed – precision speed

After the strap stop switch **B1** has been contacted, a control time is started and the counter switch **B2** is activated. The transport motor **M 1** feeds the strap at reduced speed from the stop edge of the strap. Here, the counter disk **56** has the function of a **speed monitor**; when the latter comes to a standstill, no ON – OFF function takes place at **B2** and the transport motor **M 1** is disabled. If the strap swings I the channel after the stop of strap, the control time **t9** finishes the transport of strap. The beginning of the strap is now located in the sealing unit.

7.4. Closing strap clamp 1

After the standstill of the strap the sealing motor **M 3** runs from **0-position** to the **pos. K** and closes the clamps **415/416**
(0-position = eccentric at top position, key groove on top).
After 90° switch finger **879** occupies switch **B 4** = clamp closed.
Then, the beginning of strap is secured against retraction.

In most strapping operations that position is chosen as **stand-by position**. From that position the strapping head can be guided to the packing item. A tappet with two switches signals: "Head forward" precision movement **B 7** and "Head before packing item" **B 8**.

7.5. Return movement of strap

When the clamp is closed and switch **B4** has been activated, the transport motor **M 1** runs backwards and closes the strapping loop. At the same time the counter disk signals standstill of strap transport. A timer is started simultaneously (broken strap control), which interrupts the return movement of the strap after the maximum strap feed time has expired.

7.6. Lowering tensioning slide, tensioning the strap

After the standstill of transport motor **M 1** has been reached the tensioning motor **M 2** starts operations, lowers tensioning slide **20** with the running tensioning wheel **24** down onto the strap and tightens the strap around the packing item until the nominal value of the pressure reducing valve in the multiblock has been reached, minimum strap tension 1500 N, maximum strap tension 10,000 N.

7.7. Formation of a seal, cutting the end of strap, releasing the seal, aligning

After the strap tension required has been reached, the sealing motor **M 3** moves to **0-position.** The seal without sleeve is formed, the end of the strap is cut and the seal is released. Switch finger 879 activates switch **B3**.
With 0-position being reached the tensioning motor **M 2** starts operations and aligns the end of the strap by means of the aligning device being switched on (aligning length prespecified by pulses of the counter disk).

7.8. Head backward, closing of strap guiding flap

When the seal applies to the packing item, the strapping head can be returned to its initial position. After switch **B7** (head before packing item) has been activated, the strap guiding flap can be closed.
Switch **B 6** monitors the closing operation and does not permit a further working cycle when the sealing unit is still **opened**.
A new working cycle can begin.

7.9. 0–Position

Pos. K
Clamp closed
Beginning of strap secured against retraction.
Strap guiding flap opened,
Return transport of strap,
tensioning the strap.

0 – position
Strap guiding flap closed
Cutter and clamps lifted
Strap feed

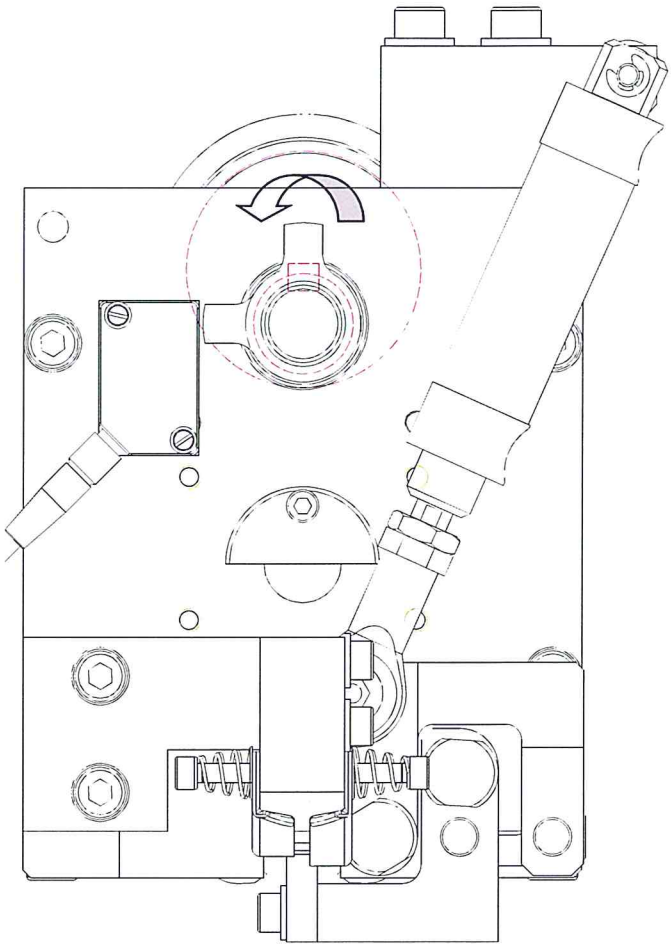

7.10.Strap stop edge

The strapping head VS 11-L is provided with a strap stop edge.

On small packages (packages with a very short supporting surface) the strap overlap (sealed overlap) has to be as short as possible such that the entering part of the strap does not project over the edge of the package during the floating movement.
Thus, a strap stop edge can be made available to always position the entering part of the strap at the same point.

The strap stop edge is set such that a strap thickness fits between strap guidance **374** and cover plate right **355**. Then the lower strap will braked at the strap stop edge.

See settings.

7.11.Sealing

The following picture shows a correctly carved seal.

Check the seals regular:

- for even carved cuttings,
- for neat cutting edges,
- for that the lower run of strap is soaked in the cuttings,
- for correct adjustment of the cutter,
- for a sufficient overlap of the lower run of strap and
- for that the seal is placed in the centre of the strap.

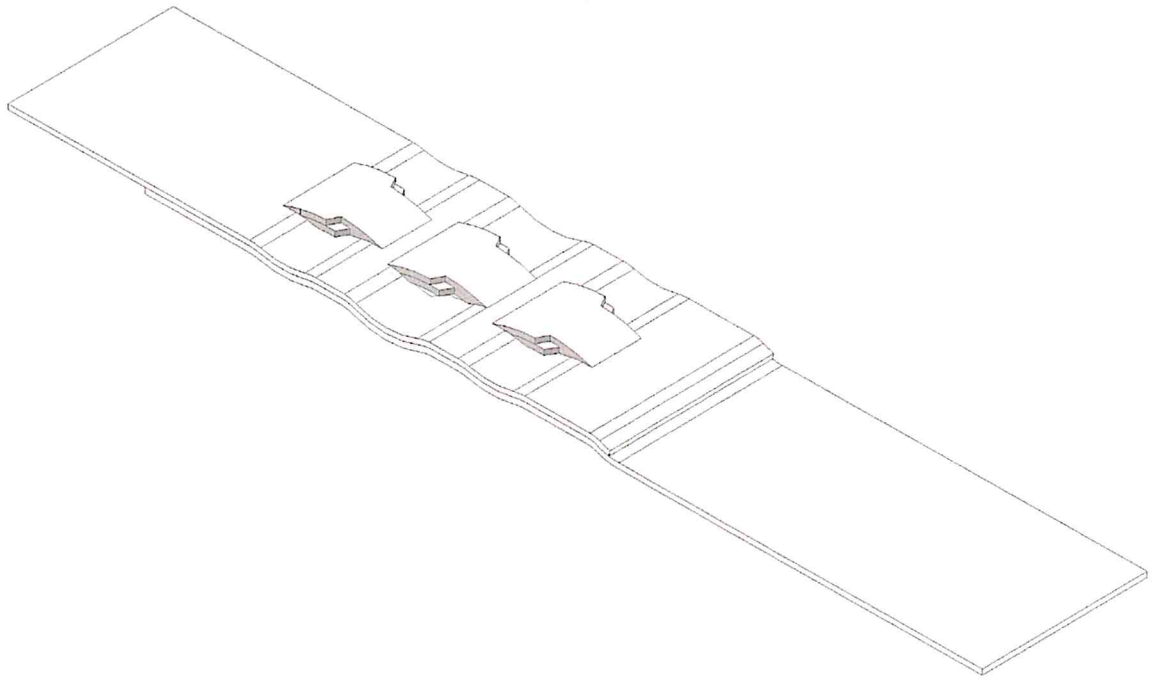

7.12.Functional diagram

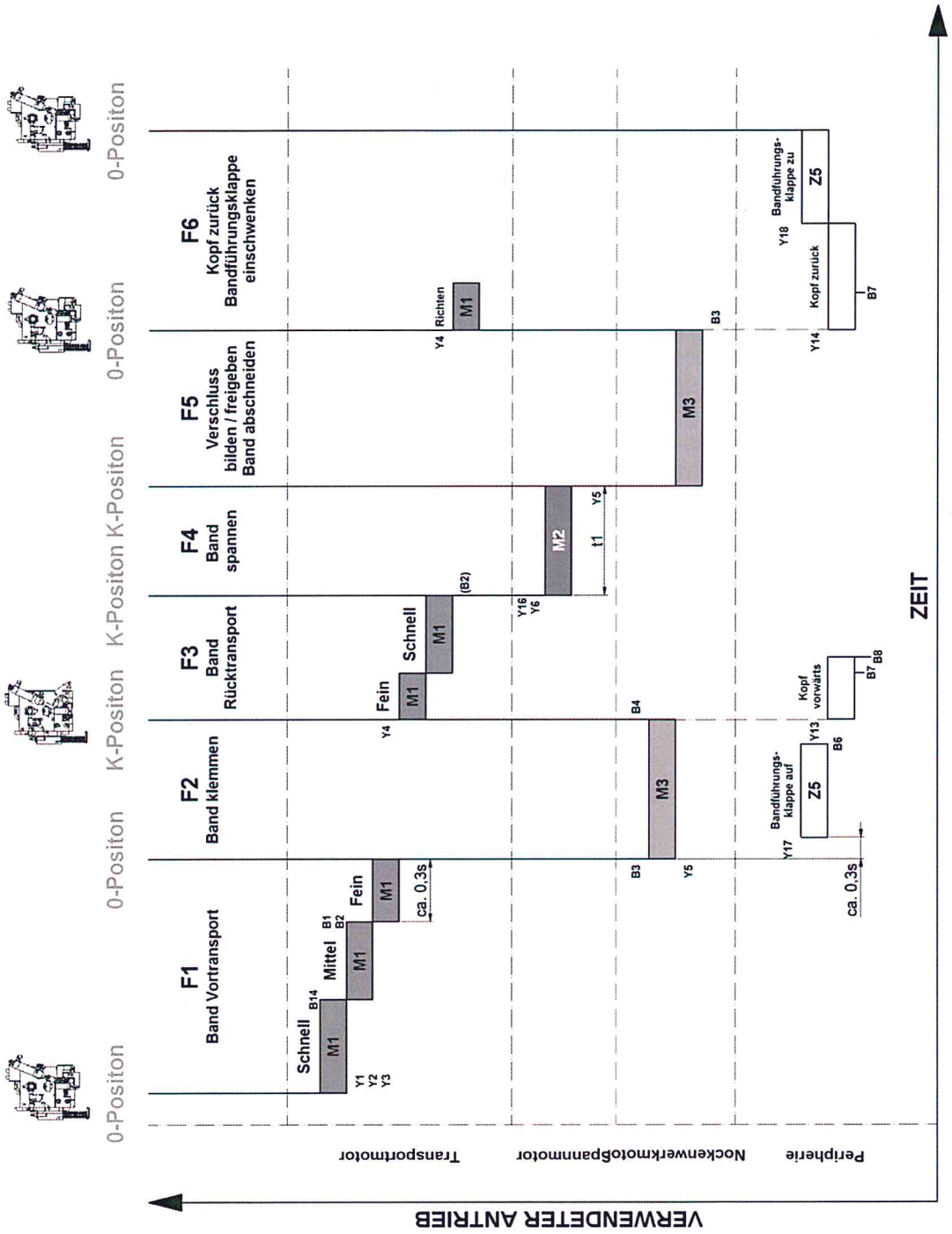

Translation key:
F1 Strap feed; **F2** Clamping strap; **F3** Strap return movement; **F4** Tensioning strap;
F5 Formation of seal / release seal, cutting of strap; **F6** Head retracted, swivelling in strap guiding flap.

Verwendeter Antrieb	=	Used drive	Zeit	=	Time
Peripherie	=	Circumference	Schnell	=	Fast
Nockenwerkmotor	=	Cam gear motor	Mittel	=	medium
Spannmotor	=	Tension motor	Fein	=	precision
Transportmotor	=	Transport motor	Richten	=	Align
Bandführungsklappe auf	=	Strap guiding flap opened	Kopf vorwärts	=	Head forward
Bandführungsklappe zu	=	Strap guiding flap closed	Kopf zurück	=	Head backward

8. Settings

8.1. Setting the switches B 1 to B 8

All switches have fixed positions. Setting is not necessary.

8.2. Setting the zero position

The zero position of the sealing unit is set such that the key groove of shaft **306** is vertical and the eccentric **309** is at its upper dead centre.
The switching surface of the switch finger **879** activates switch **B 3**, the locking screw of the jumper ring is positioned vertically then.
The position of the second switch finger for clamping position is at an offset of 90° to the **0-position.**
The locking screw is at horizontal position.
At clamping position the switch finger activates switch **B4.**

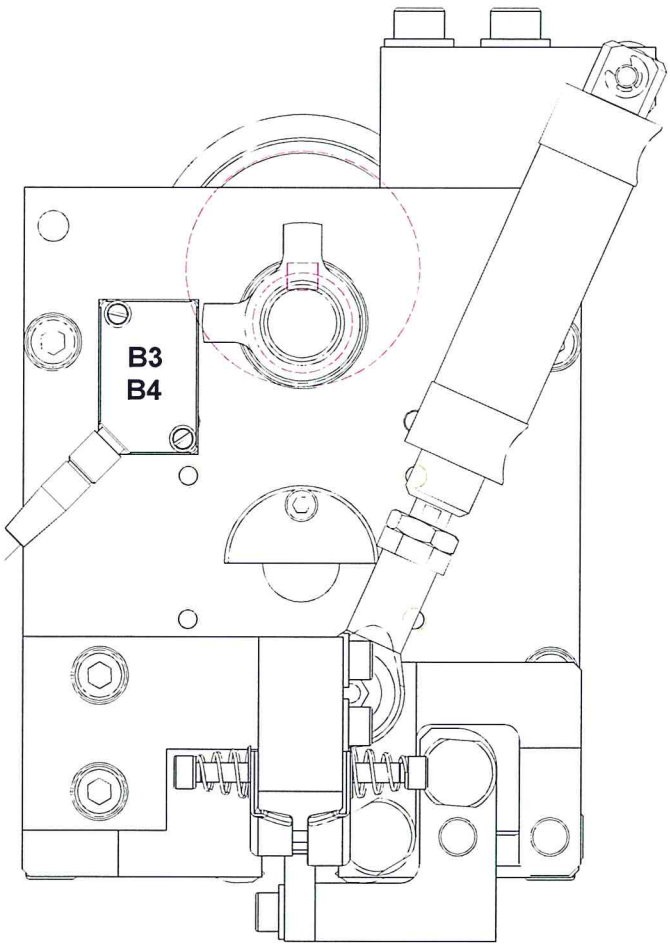

8.3. Setting the strap stop edge

The strap guidance is set such that the gap between strap guidance **374** and covering plate, right **355** is 1 strap thickness + **0.2 mm**.
Setting is performed at setting screw **375**; the locking screw is then used for fixation.

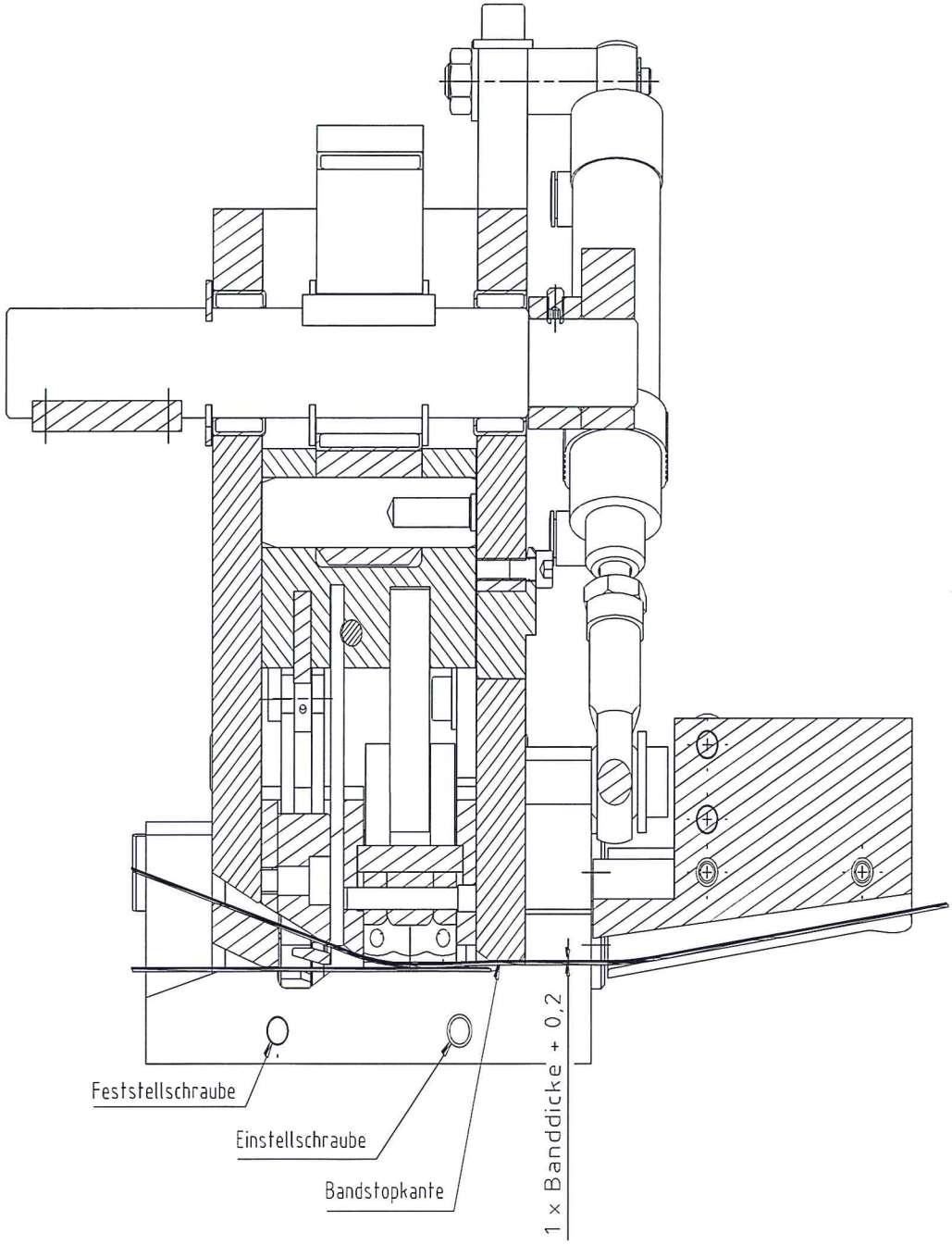

Key for figure below:

Feststellschraube	=	locking screw;	Einstellschraube	=	setting screw;
Bandstopkante	=	strap stop edge;	Banddicke	=	strap thickness

8.4. Setting the aligning rolls

The strapping material is permanently conveyed and directed by the aligning rolls.

Setting is implemented via the adjusting screw **(136)**. For that purpose, the two retaining screws **(133)** are loosened.
Turning the adjusting screw clockwise results in a higher aligning effect, turning it counter clockwise results in a lower aligning effect.
Upon termination of the setting the position of the upper aligning rolls is fixed by retaining screws.

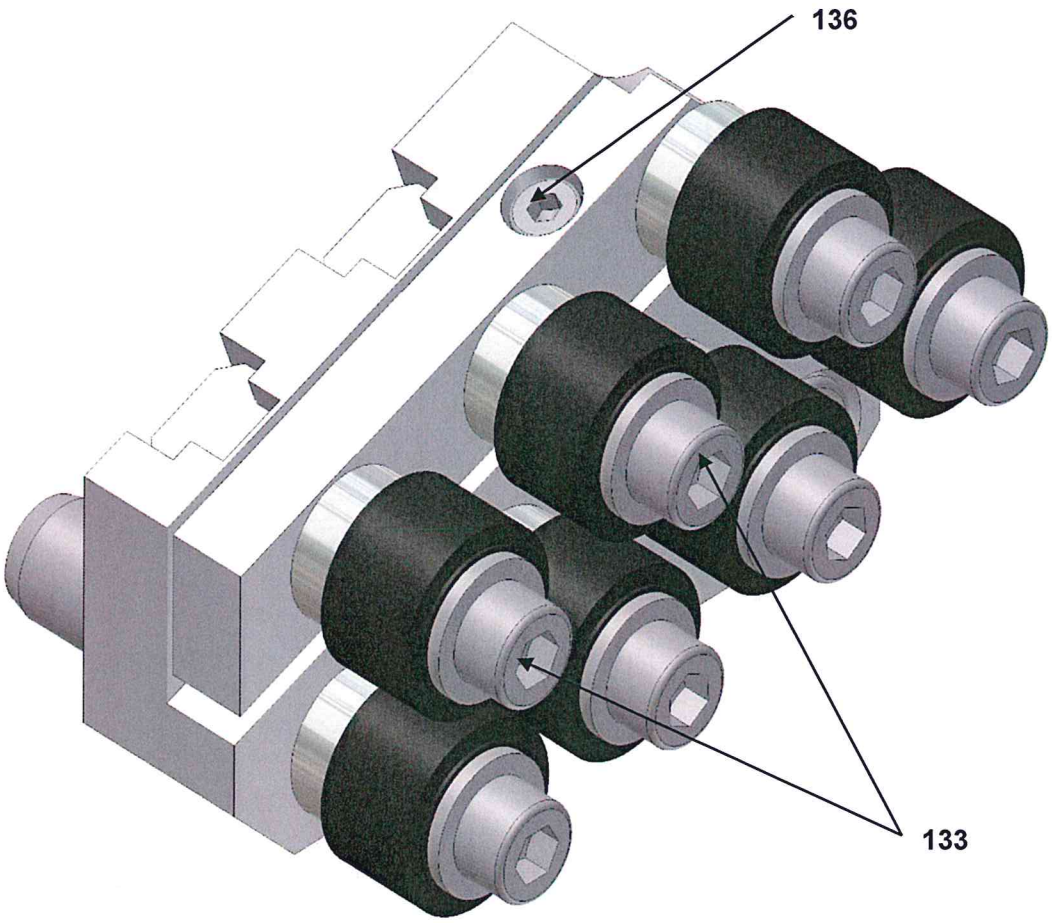

8.5. Setting air pressure

Four pressure settings are required for the best result.

Pressure controller:

- **DR 1** Pressure controller on the machine (Main controller) ¾"
- **DR 2** Pressure controller on the multi-block
- **DR 3** Pressure controller in the multi-block
- **DR 5** Pressure controller for Clamping force transport compensator

1. The pressure controller **DR 1** is found on the maintenance unit of the machine.

The maintenance unit provides for the quality of the compressed air. It filters water, oil aerosols as well as dirt and rust particles out of the air and provides the entire machine with sufficient air pressure. It should be able to discharge oiled and unoiled air.

In case of high level differences between the maintenance unit and the strapping head or a hose length of more than 5 m a separate oiler must be installed near the head.

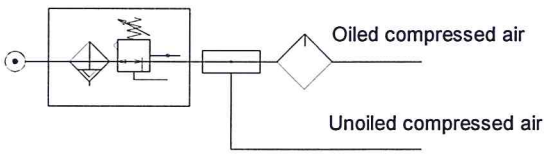

If the machine is without air supply, the maintenance unit must be installed either directly on the head or as near as possible near the head (depending on the installation position of the head).

- **Cross section of port:** **3/4"**
- **Air pressure:** **6 bar flow pressure**
- **DR 1** is set to **5.5–6.5** bar.

Effects of that setting on the strapping head:

- The pressure set results in **maximum strap tension** and **fastest strap transport speed**

Activation via unrestricted valve **Y2** in the multi-block and corresponding consumer valve **Y3** to **Y8** and **Y16, Y17, Y18.**

2. The pressure controller **DR 2** is found at the multi-functional block. It is set to 1.5 to 2 bar, readable on its pressure gauge.

The set pressure leads to the **minimum** strap tension and feed speed.

Selection directly **via** consumer valve, **Y3**, **Y4**, **Y6.**

Main functions:

a) Pulse counting precise movement
b.) Slow partial strap feed
c.) Slow strap return during movement of head
„Head on packing item"

3. The pressure controller **DR 3** is found at the multi-functional block. It is used for setting the strap tension between minimum and maximum.

Selected via valve **Y1** in the multi-functional block and the corresponding consumer valve **Y6.**

The main function is the setting of the strap tension.

The pressure is set at the pressure regulation valve, at valve **Y1**, and read at its pressure gauge. The valve can be activated manually or via the control.

4. The pressure controller **DR 5** is needed for the contact pressure force of the counter-roll against the conveying roll.

Depending on the kind and quality of strap the contact pressure force between conveying roll and counter-roll is set by the pressure control valve **DR 5**.

It has to be set such that the strapping material neither penetrates the layer of the conveying roll too strongly nor that slipping of the conveying roll results from the setting.

9. Maintenance

9.1. General

- The permanent readiness for operation of the strapping head type **VS 11-L** is achieved by regular and careful maintenance.
- Always keep the strapping head clean.
- Keep polluting particles and foreign substances away from strap guidance and the sealing area.

Attention!
All parts must be checked at regular intervals and replaced if worn. Parts worn out impair sealing stability and affect the transport security of the packing item.

Disregarding this note can result in faults and injuries.

Use **original TITAN spare parts** only!
The use of parts not being TITAN spare parts excludes warranty claims and liability.

Tool inspection!

Perform a **daily** visual inspection of the outside of the unit. The early detection of damaged parts extends the life of the unit. Replace all damaged parts **immediately** with **Original TITAN spare parts**.

9.2. Maintenance intervals

Sealing unit:

- Before the beginning of a shift: assessment of the seal without sleeve.
  All cuts must be fully available and undamaged.
- Weekly inspection of the clamps and all cutters.
- Every three weeks inspection of the entire assembly including dismounting, cleaning and lubrication.

Transport element:

- Weekly inspection of the tensioning idler indentation.
- Every three weeks inspection of the entire assembly including dismounting and cleaning.

9.3. Lubrication points

- All bearings installed are provided with long-time lubrications which requires renewal just once a year.
- All sliding surfaces of the sealing unit must be lubricated.
- **The following greases can be used:**

Shell	Retinax AM
Mobilgrease	Special
DEA	Molytex Grease EP 2
Esso	Mehrzweckfett
Aral	Mehrzweckfett F

Important!
This head may only be operated in conjunction with a compressed air maintenance unit comprising: pressure reducer, water separator and oiler. It cleans the compressed air, removes condensation water and permanently supplies the motors with the amounts of oil required. A screwdriver is used to set the oiler on the upper side such that a drop of oil falls downward in the sight glass during each strapping. Turning cw results in less oil, turning ccw in more oil.

Attention!
In no case must the strapping head be operated without oil in the oiler, since the immediate consequence would be the destruction of the compressed air motors!

During the entire operation the compressed air motors must be operated with filtered and oiled compressed air. As to the amount approx. 3 to 5 drops are required per 1 m³ air, this corresponds to 0.12 to 0.2 g/m³. Unalloyed mineral oil is the lubricating oil to be considered in first place. It must be of low viscosity and without resin or acid. Viscosity of 2 to 4°E at 50 °C (12-30 cSt) suited well (for other temperature ranges see viscosity table). Motor temperatures ranging from -30 to +100 °C are admissible. In case of ambient temperatures of less than +5 °C, however, there is the risk of icing. In that case dried air or appropriate ice-inhibiting lubricants (e.g. "Killfrost Anti Eis") are recommended.

Caution!
Wear breathing equipment when using antifreeze agents.

The following oils can be used:

Esso	D 32	-10	bis	+30°C
	D 100	+25	bis	+55°C
	CL 320	+45	bis	+75°C
DEA	Aries 32	-25	bis	+20°C
	Aries 100	0	bis	+50°C
Shell	Tonna Oel R32	-10	bis	+30°C
	Tonna Oel R100	+25	bis	+55°C
Mobil	Almo 525	-20	bis	+20°C
	Almo 527	0	bis	+30°C
	Almo 528		über	+15°C

9.4. Maintenance transport unit

- The maintenance of the transport unit should be performed at three-week intervals.

- To main idler **24** remove safety disk **14** and pull off the idler including supporting disk to the front. Use a wire brush to clean the idler by removing paint and wax residues. Following that, apply grease to the motor shaft and slip on the idler including supporting disk again. Plug in the safety disk again.

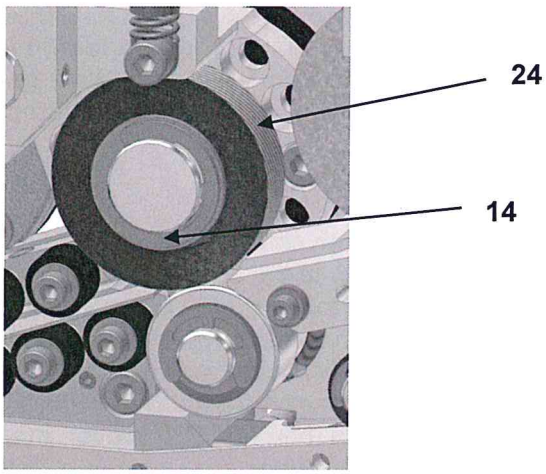

- Loosen the fastening screws **2021** and push the light barrier holding device **2015** away from the counting disk. Remove safety disk **59** and pull off counter disk **506** including axial disk to the front. Remove safety disk **34** and pull off transport roll including supporting disk to the front. Clean Vulkollan coat and check it for damage. Apply grease to the motor shaft and slip on the transport roll including supporting disk again. Plug on the safety disk. Push back the light barrier holder and ensure that the counter disc and counter-roll can move freely. Following that tighten the fastening screws.

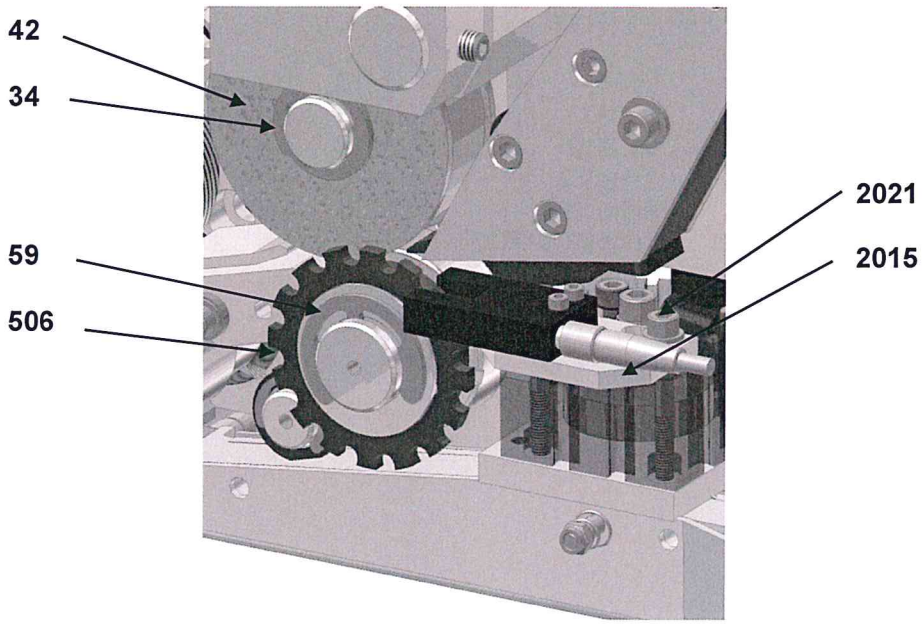

9.5. Maintenance of the aligning device.

- Loosen cheese-head screws **124** and dismount them together with the lateral guide **122**.
- Loosen cheese-head screw **132** and pull off the complete aligning device forward.
- Use compressed air for the cleaning of the aligning device!

Attention!
When air-cleaning the unit by means of compressed air the worker must wear protective glasses.

- Putt he aligning device back into the strapping head and insert fastening screw.

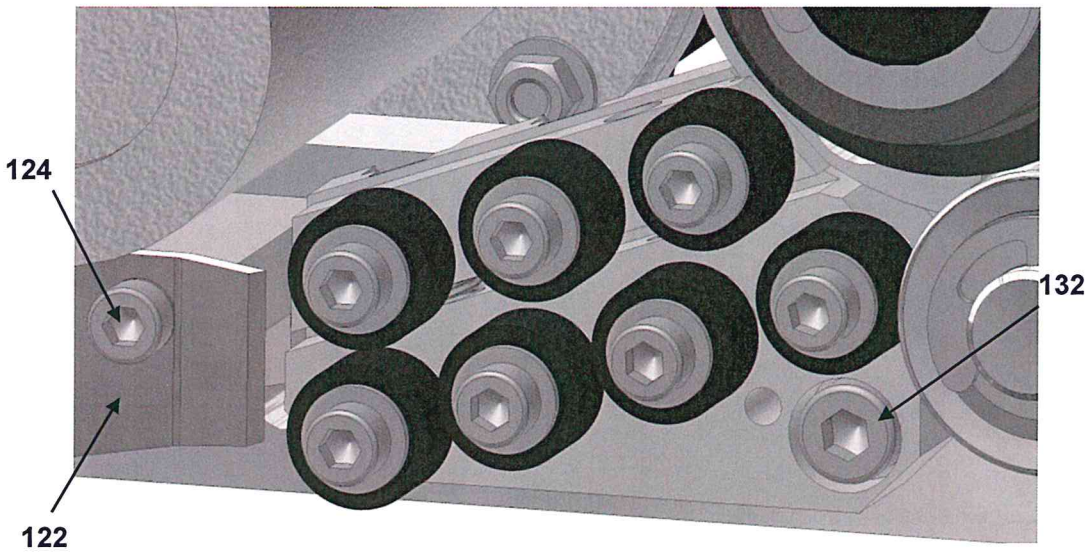

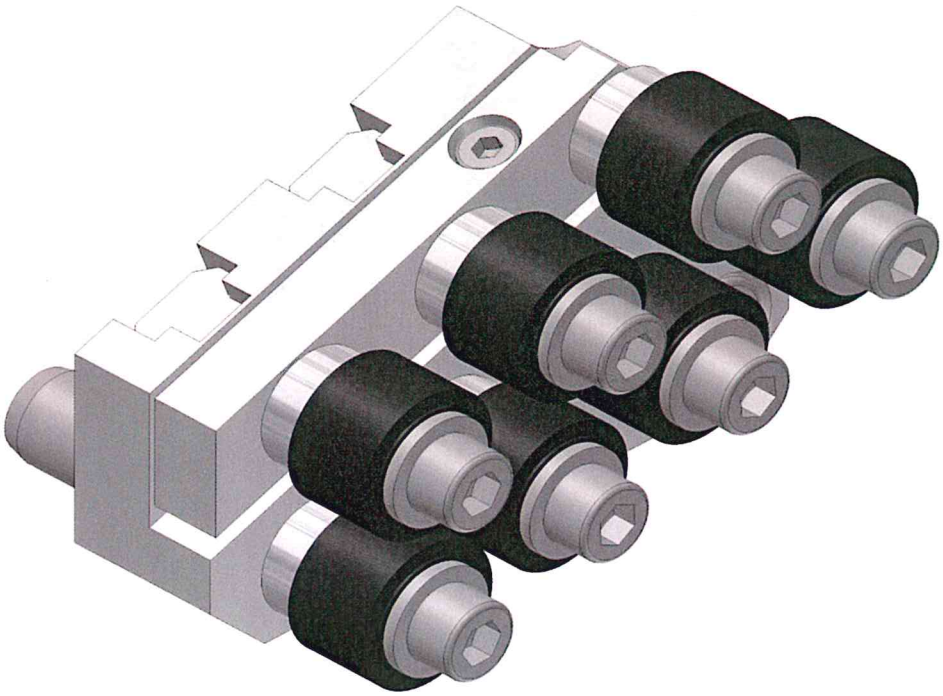

9.6. Maintenance cutter package

- During the check and maintenance of the cutter package special attention must be paid to the clamping edges of the clamps **415 + 416**, the cutting edge of cutter **413** and the cutting edges of the upper and lower cutters. Worn-out clamping edges cause the slipping-through of the strap during the tensioning operation. The cutting edges should be undamaged and sharp. Blunt and notchy cutting edges cause a strong formation of burr when notching and cutting.

- **For disassembly proceed as follows:**
  Move the sealing unit to the lower position (tongs closed). Detach the fastening screws of strips **303** and clamping guidance **1041/1042/1043**. Remove strips and clamping guidance. Detach fastening screw of the cover **372** remove cover. Use an M6 bolt to pull the connecting pin **312** through the cover hole. Then the cutter package can be drawn to the front out of the sealing unit.

- **Assembly is performed in reverse order.**

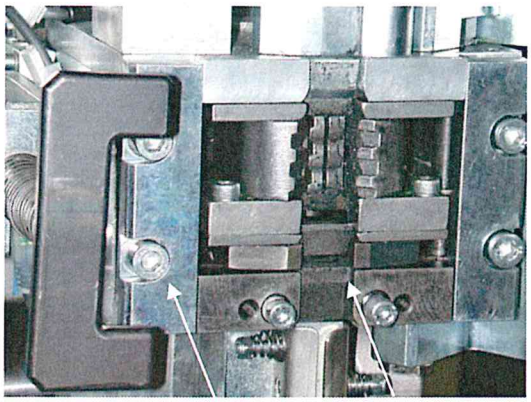

303 **1041/1042/1043**

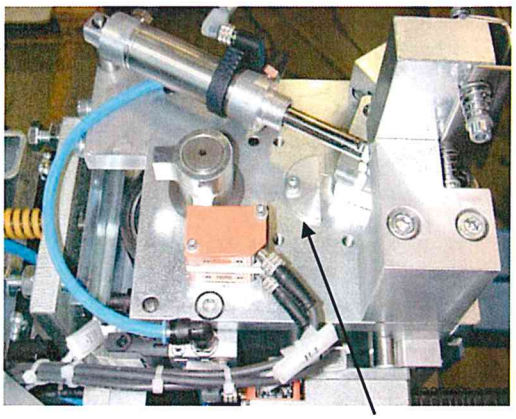

372

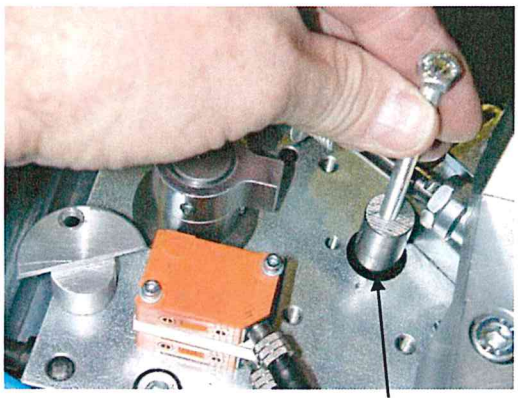

312

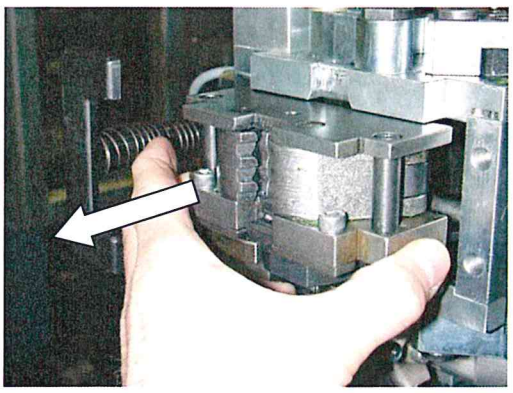

Cutter package unit:

- The cutter package unit is mounted and screwed completely.
- It comprises the cut groups: notching, cutting and clamping.
- To keep times for change-overs and repairs short it is therefore recommended to order a spare cutter package.
- To achieve constant quality and life of the cutter packages it is recommended to send worn packages to Titan for repair or replacement.

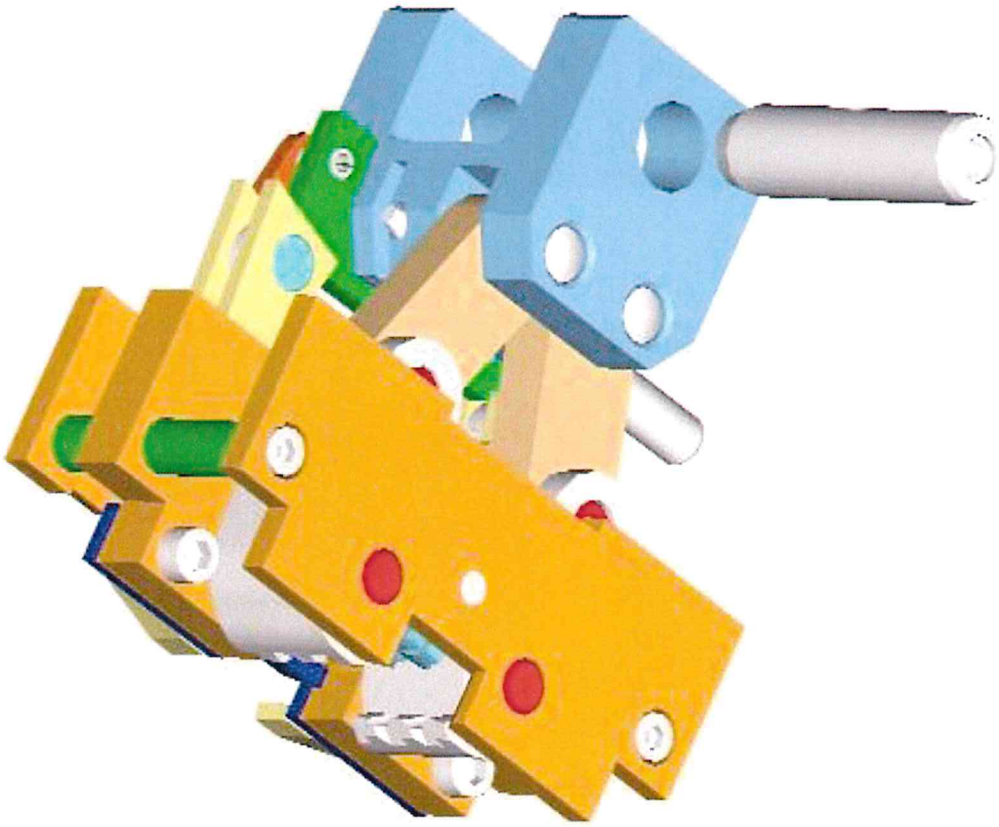

9.7. Dismounting and mounting the sealing unit

- To dismount the sealing unit it is required that all plug contacts of the switches **B3, B4, B6** and the head disable **513** are unscrewed.

- Loosen the 2 fastenings crews of link **347** and the fastening screw of link **9**. The sealing unit can then be remove upwards from worm unit 2 and replaced with a replacing sealing unit or repaired.

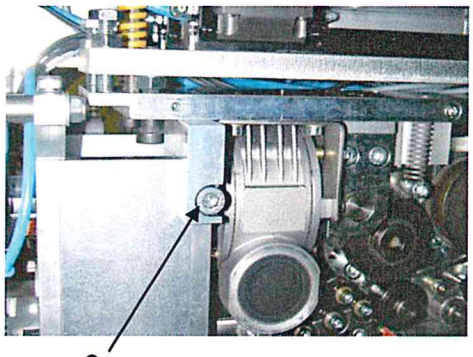

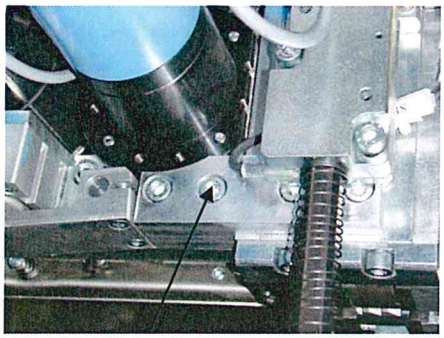

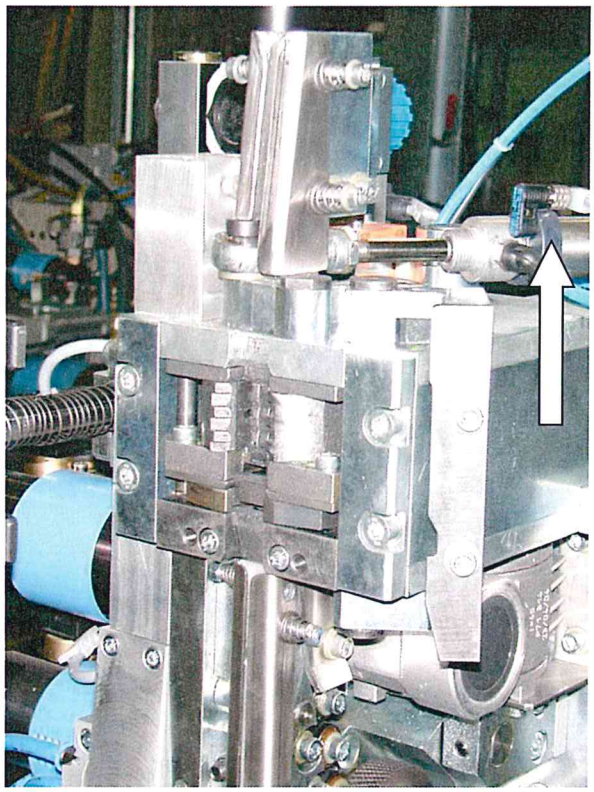

10. Search for faults – troubleshooting

Fault	Cause	Remedy
Strap not fed into strap channel system.	There is no strap between rollers **42 and 62.**	Re-insert strap.
	Sealing unit not at zero position.	Reset to zero position.
	The strap guiding flap is open. The safety switch **B6** is activated.	Restore zero position or eliminate the jam.
The strap does not reach the strap stop switch **B1.**	Offset at the channel transition points (bordering)	Align transitory points.
The strap does not reach the sealing section.	0-position is not correct. The tongs are already closed.	Re-adjust 0-position.
Strap overlap too long / too short.	Not enough count pulses.	Increase number of pulses.
	Too many count pulses.	Reduce number of pulses.
	Counter switch defective	Check counter switch.
Change-over pulse from feed to tensioning does not come.	Counter switch	Check counter switch.
Strap tension too low.	Idler **24** slips.	Replace idler.
Strap breaks during tensioning at clamping edge.	Strap tension chosen too high.	Reduce tension via pressure controller **DR 3**.
Strap not cut off.	Cutting blade is blunt, the counter cutter is defective.	Cut off strap manually. Provide for 0-position. Replace cutter or counter cutter.
The head is not released from the packing item.	Cutter is broken.	Manually cut off strap. Move head to initial position. Repair of the cutter.

11. Declaration of incorporation

Declaration of incorporation of partly completed machinery

in terms of the directive 2006/42/EC on machinery, Annex II B

The manufacturer

TITAN Umreifungstechnik GmbH & Co.KG
Berliner Straße 51-55

58332 Schwelm

herewith declares that the pneumatic strapping head for steel strap described below

Type designation:	VS 11-L
Serial number:	01 0003

corresponds to the essential requirements of the following directives (the requirements of which have been fulfilled, see annex), as far as is possible within the scope of this delivery:

Directive 2006/42/EC on machinery
Directive 2004/108/EC relating to EMC

Used harmonised standards, published in the official journal of the EU:

EN ISO 12100-1: 2004,	Safety of machinery – Basic concepts, general principles for design – Part 1: Basic terminology, methodology
EN ISO 12100-2: 2004,	Safety of machinery – Basic concepts, general principles for design – Part 2: Technical principles and specifications
EN 1010-1:2005	Safety of machinery – Safety requirements for the design and construction of printing and paper processing machines – Part 1: General requirements (Final concept 02/2003)
EN 1010-3:2002,	Safety of machinery - Safety requirements for the design and construction of printing and paper processing machines – Part 3: Cutting machines
EN 60204-1:2007,	Safety of machinery – Electrical equipment of machines – Part 1: General requirements

Furthermore the manufacturer declares, that the technical documentation for this partly completed machinery is compiled in accordance with part B of Annex VII and undertakes to transmit, in response to a reasoned request by the national authorities, the relevant information of the partly completed machinery in digital form.

This partly completed machinery must not be put into service until the final machinery into which it is to be incorporated has been declared in conformity with the provisions of this directive and for which an EC declaration of conformity of the machinery in accordance with part A Annex II has been published.

Authorized representative for the compilation of the technical documentation:

TITAN Umreifungstechnik GmbH & Co. KG
Berliner Strasse 51-55
58332 Schwelm

Schwelm, the 16.07.2010

Peter Wilhelm Lenzen jr.
President

Annex

Requirements of Annex I from the directive 2006/42/EC which are fulfilled. The numbers relate to the parts of Annex I:

1.1.2., 1.1.3., 1.1.5., 1.2.2., 1.2.3., 1.2.6., 1.3.1., 1.3.2., 1.3.4., 1.3.7., 1.3.8.2., 1.4.1. (partly), 1.4.2.1. (partly), 1.5.1., 1.5.2., 1.5.8., 1.5.10., 1.6.1., 1.6.2., 1.6.3., 1.6.4., 1.6.5., 1.7.1., 1.7.2., 1.7.3., 1.7.4.1., 1.7.4.2., 1.7.4.3.

Das TITAN Gesamtprogramm	The TITAN range of products	La gamme de produits TITAN
Umreifungsgeräte für Stahl- und Kunststoffband	**Strapping tools** for steel and plastic strap	**Appareils de cerclage** pour feuillard d'acier et plastique
Umreifungsmaschinen und Aggregate für Stahl- und Kunststoffband	**Strapping machines and aggregates** for steel and plastic strap	**Machines et têtes de cerclage** Pour feuillard d'acier et plastique
Ballenumreifungssysteme für Stahl- und Kunststoffband	**Baling systems** for steel and plastic strap	**Systèmes de cerclage de balles** Pour feuillard d'acier et plastique
Crimpsysteme	**Crimp systems**	**Systèmes crimp**
Stanzverbinder	**Strip joining devices**	**Système d'agrafage de bobines**
Verpackungsband aus Stahl- und Kunststoffband	**Strapping** Steel and plastic strap	**Feuillard d'emballage** Acier et plastique
Verschlusshülsen	**Seals**	**Chapes**
Zubehör	**Accessories**	**Accessoires**
		TITAN Umreifungstechnik GmbH & Co. KG Postfach 440, 58317 Schwelm Berliner Straße 51-55, 58332 Schwelm Telefon: +49 (0) 23 36 / 8 08-0 Telefax: +49 (0) 23 36 / 8 08-208 E-Mail: info@titan-schwelm.de www.titan-schwelm.de **Technische Änderungen vorbehalten** **Subject to technical alterations** **Sous réserve de modifications techniques**

Ersatzteilliste

Spare parts list

Liste des pièces de rechange

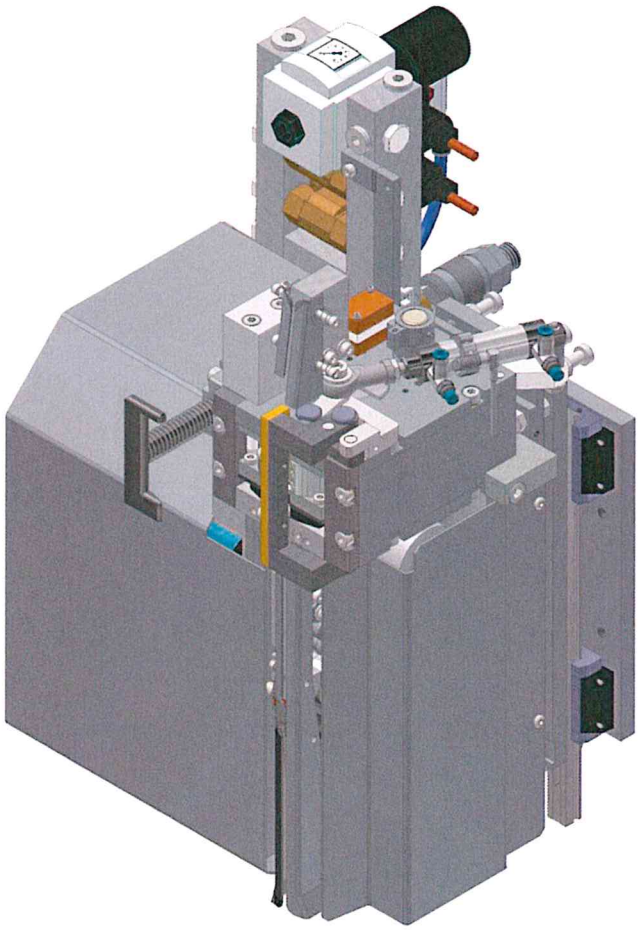

VS 11-L

01 0003

Pneumatischer Umreifungskopf für Stahlband, Hülsenlosverschluss

Pneumatical Strapping head for steel strap seelless joint

Tête pneumatique de cerclage pour feuillard d'acier fermeture sans chape

TITAN®
Wir halten zusammen

E 02-11 EU 28/13

Inhaltsverzeichnis - Table of Centents - Sommaire

Page

1. Verschließer / Sealing unit / Dispositif de fermeture 4

1.1. Bandabhängige Teile / Strap depending Parts / Part tributaire de feuillard 4
1.2. Gehäuse Verschließer / Housing sealing unit / Boîter de dispositiv de fermeture ..5
1.3. Nockenwelle / Cam shaft / Arbre á cames 6
1.4. Bandführungsklappe / Strap guiding flap / Couvercle de guide de feuillard 7
1.5. Anbauteile / Attachment parts / Piéces á ajouter 8
1.6. Messpaket 19mm / Cutter package 3 / 4Kit de couteaux 19mm 9
1.7. Messpaket 13mm – 16mm / Cutter package 1 / 2"-5 / 8" / Kit de couteaux 13mm – 16mm 10
1.8. Kopfabschaltung / Head deactivation / Tête dé branchement 11

2. Antrieb / Drive / Entraînment 12

2.1. Kopfaufhängung / Head suspension / Suspension de tête 13
2.2. Anbauteile Antrieb / Attachment parts drive / Piéces á ajouterde entraînment 14
2.3. Transportantrieb / Transport / Transport 15
2.4. Spannantrieb / Tensioning system / Entraînement du serrage 16
2.5. Bandanhängige Teile 16mm - 19mm / Strap depending Parts 5/8"-3/4 / Part tributaire defeuillard 16mm – 19mm 17
2.6. Bandanhängige Teile 13mm / Strap depending Parts 1 / 2" / Part tributaire defeuillard 13mm 18
2.7. Pneumatikausrüstung / Pneumatic equipment / Équipement de pneumatique 19
2.7.1. Pneumatikplan/pneumatic plan/équipement pneumatique 20
2.8. Multifunktionsblock / Multi functional block / Bloc multifunctionnel 22
2.9. Elektroausrüstung / Electrical equipment / Équipement de électrique 23
2.10. Anbauteile / Attachment parts / Piéces á ajouter 24

3. Ersatzteilliste, Spare Parts list, Liste des pièces de rechange 25

4. Bestellformular / Order Form / Formulaire de commande 43

Hinweise zur Ersatzteilbestellung
Information on how to order spare parts
Remarques pour la commande de pieces de rechange

- Bitte geben Sie zur Bestellung von Ersatzteilen die Bestellnummer an, bitte benutzen Sie das **Bestellformular am Ende dieser Ersatzteilliste.**

- When ordering spare parts please indicate the order number, please use the **order form at the end of this spare parts list.**

- Pour commander des pièces de rechange veuillez indiquer le numéro de commande, vous trouverez à la fin de cette **liste de pièces de rechange un formulaire de commande.**

- **Verwenden Sie nur Original TITAN Ersatzteile!**
  Die Verwendung von anderen als TITAN Ersatzteilen schließt Garantieleistungen und Haftpflicht aus.

- **Only use original TITAN spare parts!**
  The use of other manufacturer's parts excludes liability and warranty services.

- **Utilisez uniquement des pieces de rechange TITAN d'origine!**
  L'utilisation de pieces de rechange d'autre origine exclut toutes prestations de garantie et toute responsabilité.

1. Verschließer / Sealing unit / Dispositif de fermeture

1.1. Bandabhängige Teile / Strap depending Parts / Part tributaire de feuillard

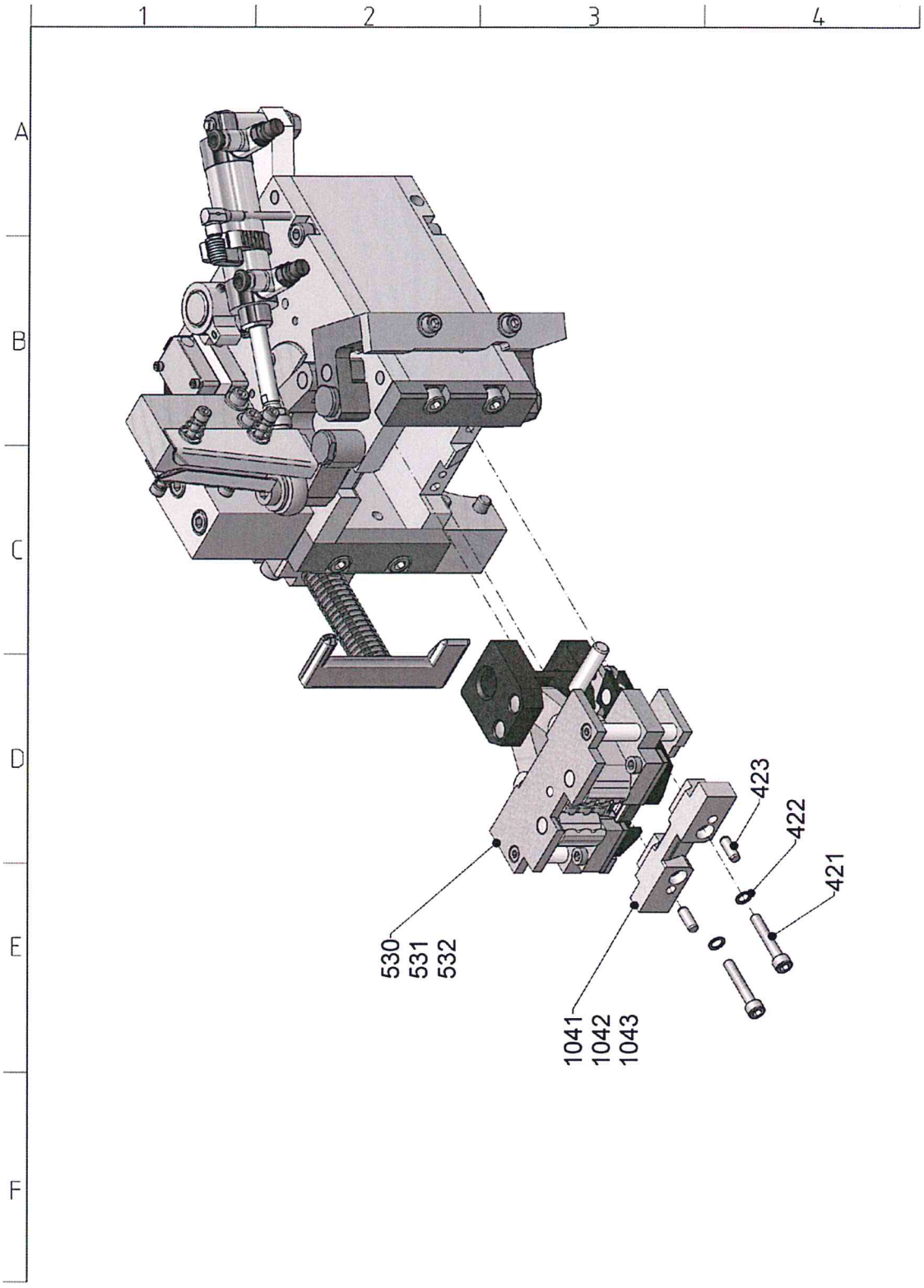

1.2. Gehäuse Verschließer / Housing sealing unit / Boîter de dispositiv de fermeture

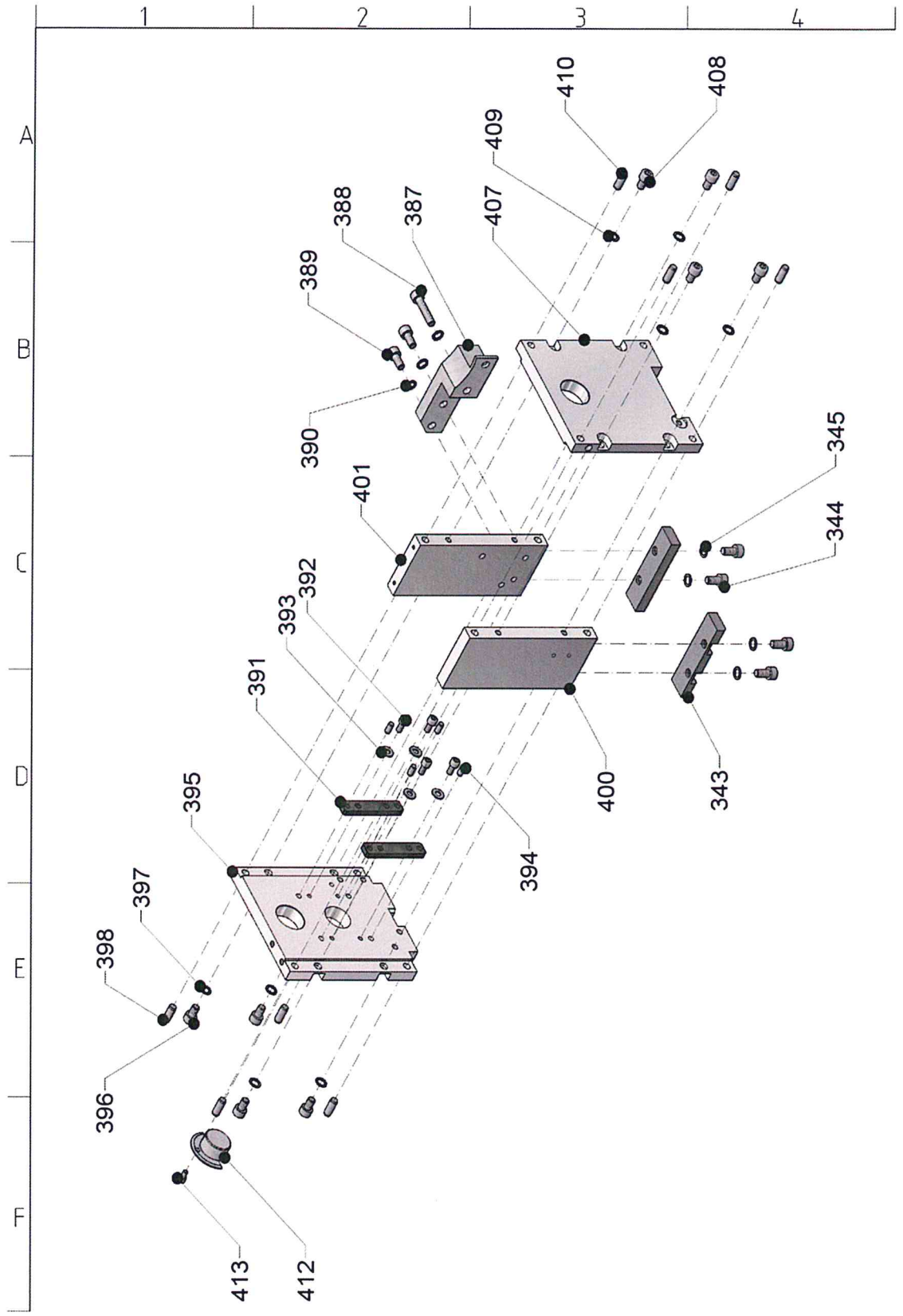

1.3. Nockenwelle / Cam shaft / Arbre á cames

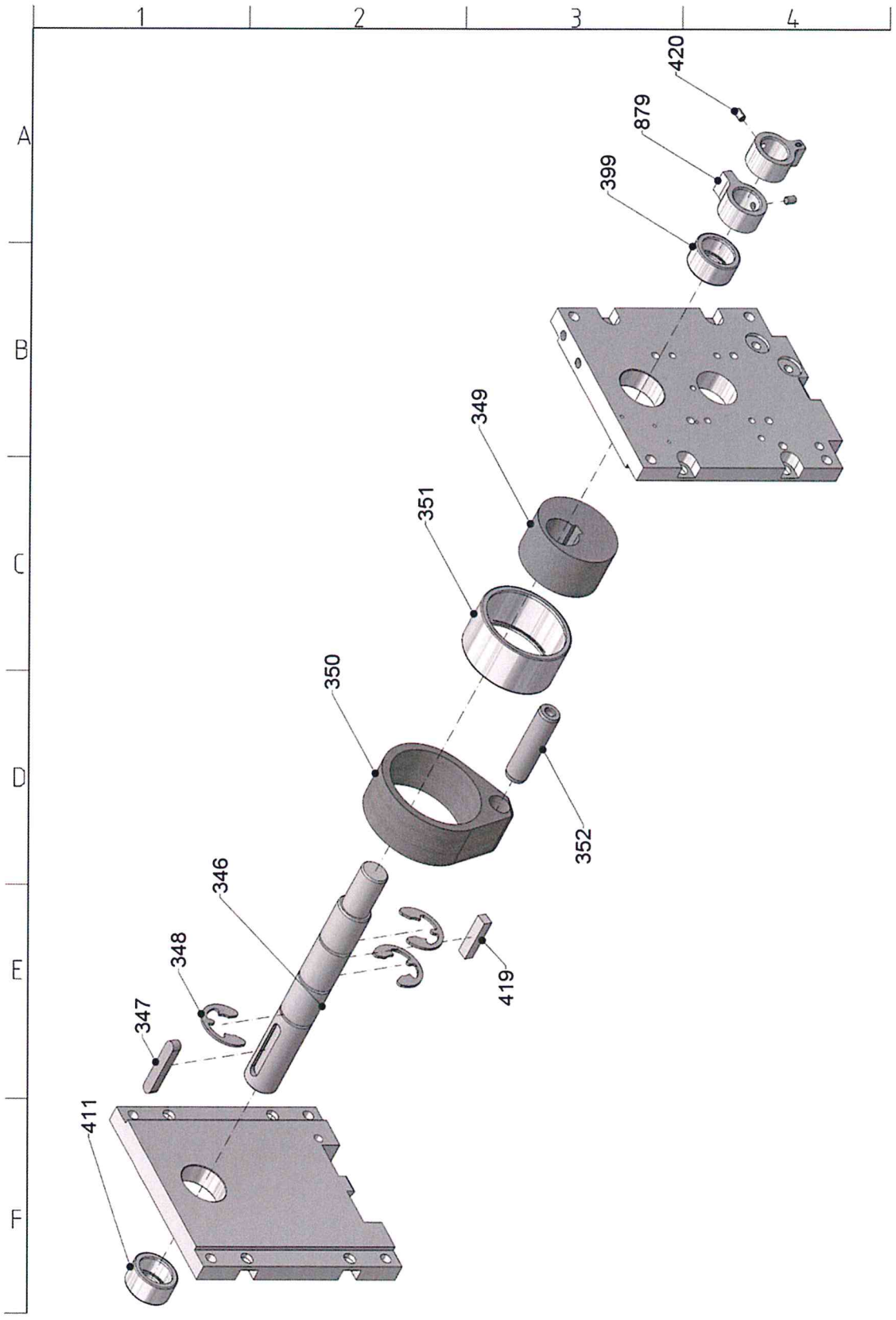

1.4. Bandführungsklappe / Strap guiding flap / Couvercle de guide de feuillard

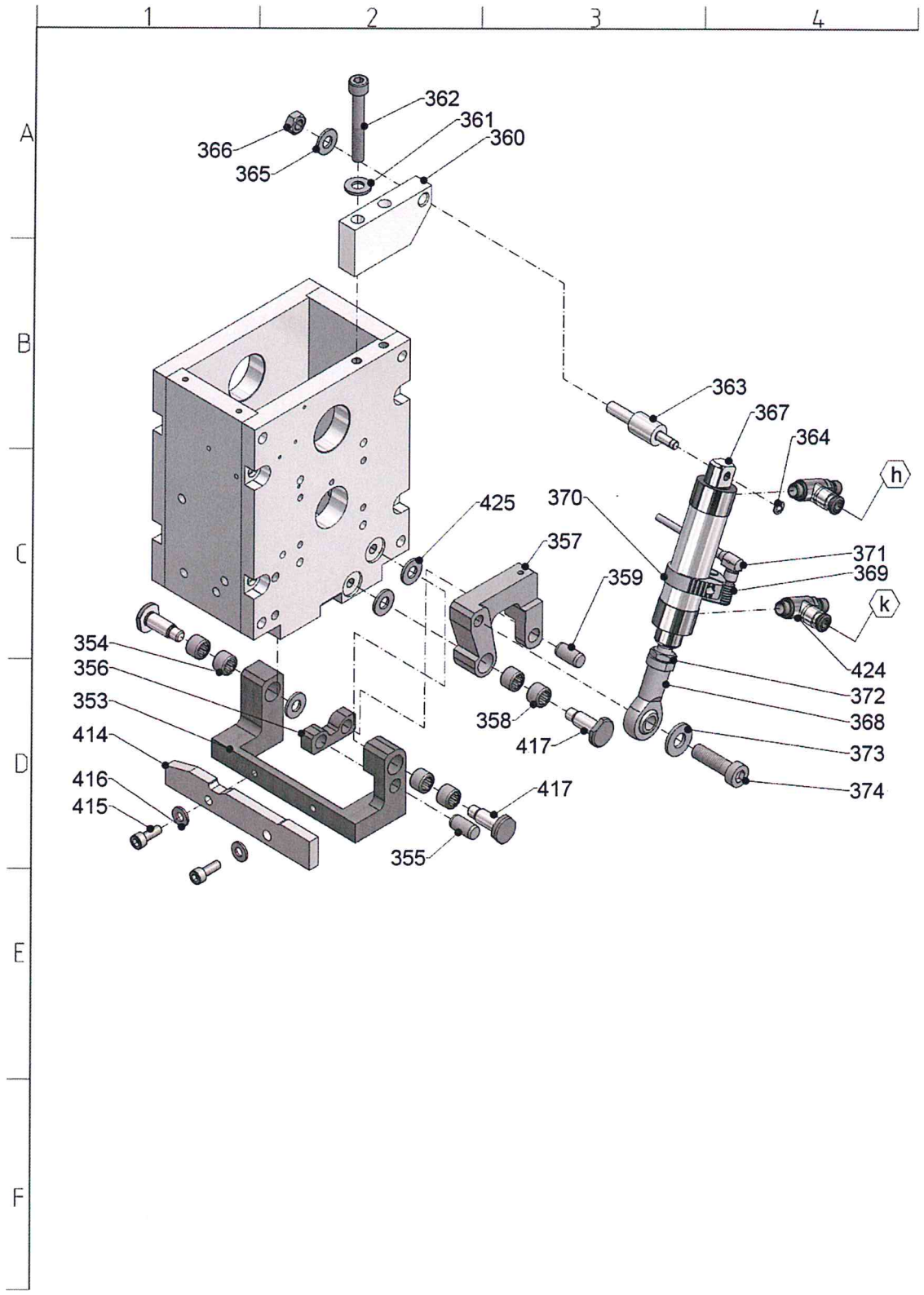

1.5. Anbauteile / Attachment parts / Piéces á ajouter

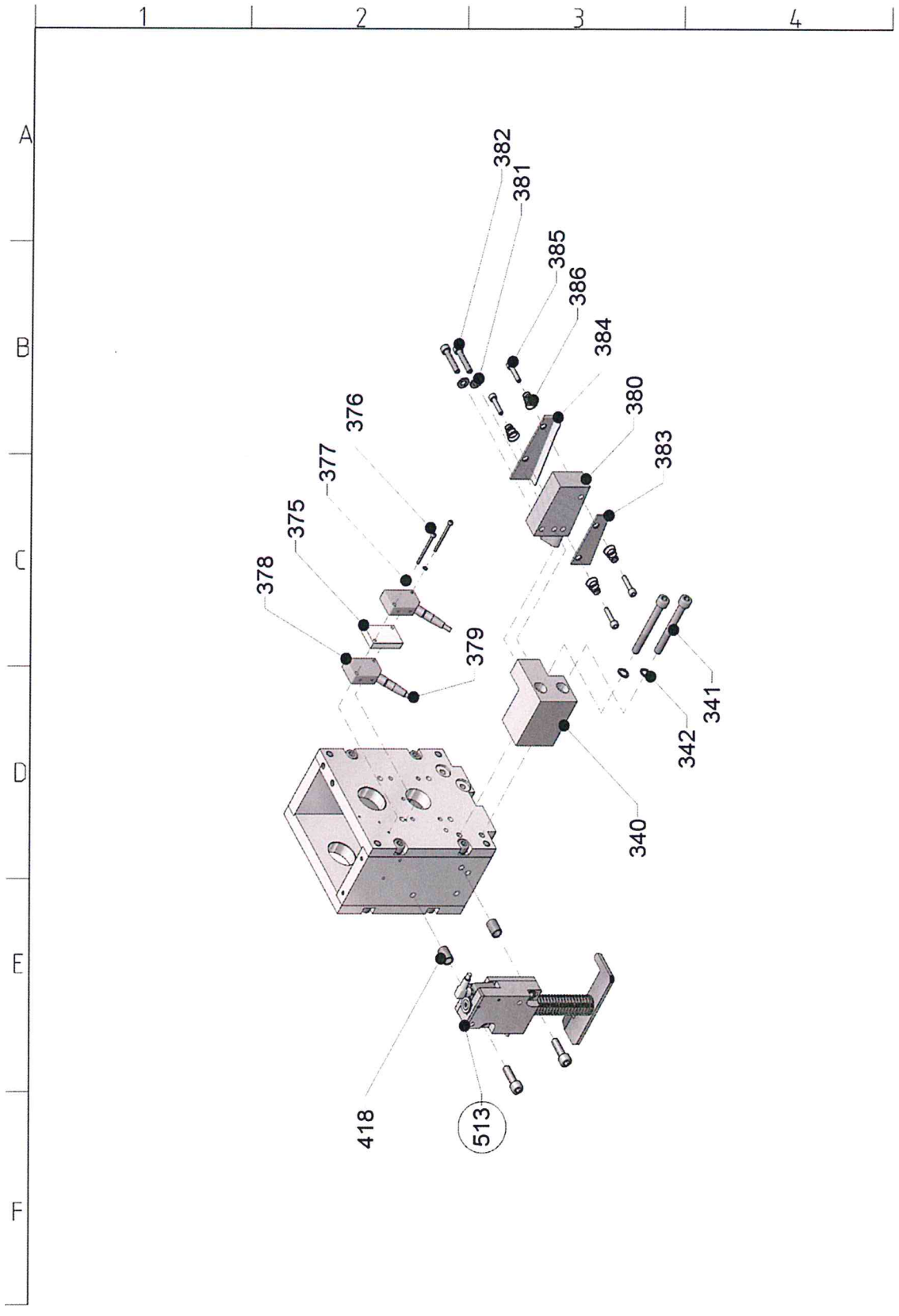

1.6. Messpaket 19mm / Cutter package 3 / 4Kit de couteaux 19mm

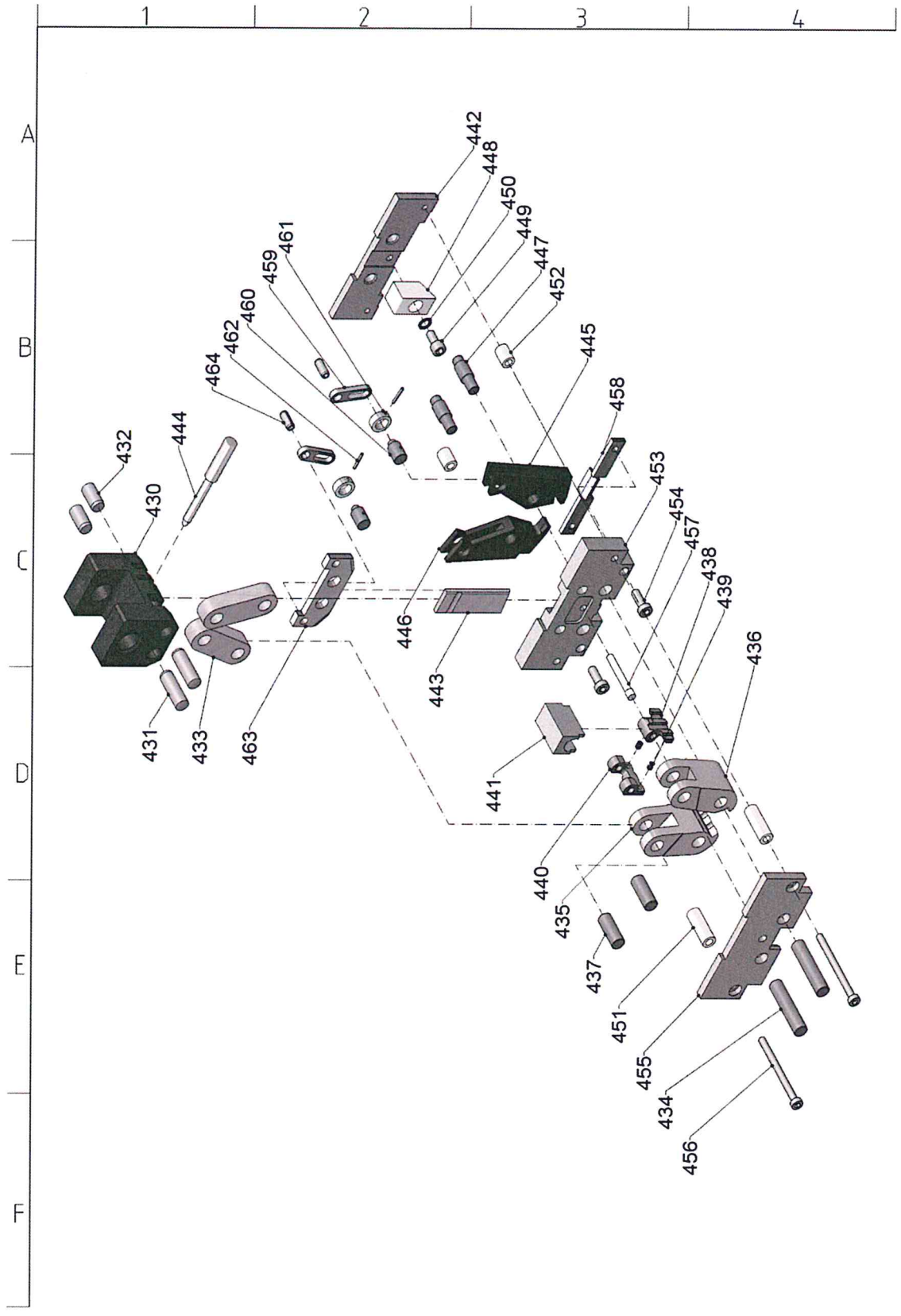

1.7. Messpaket 13mm – 16mm / Cutter package 1 / 2“-5 / 8“ / Kit de couteaux 13mm – 16mm

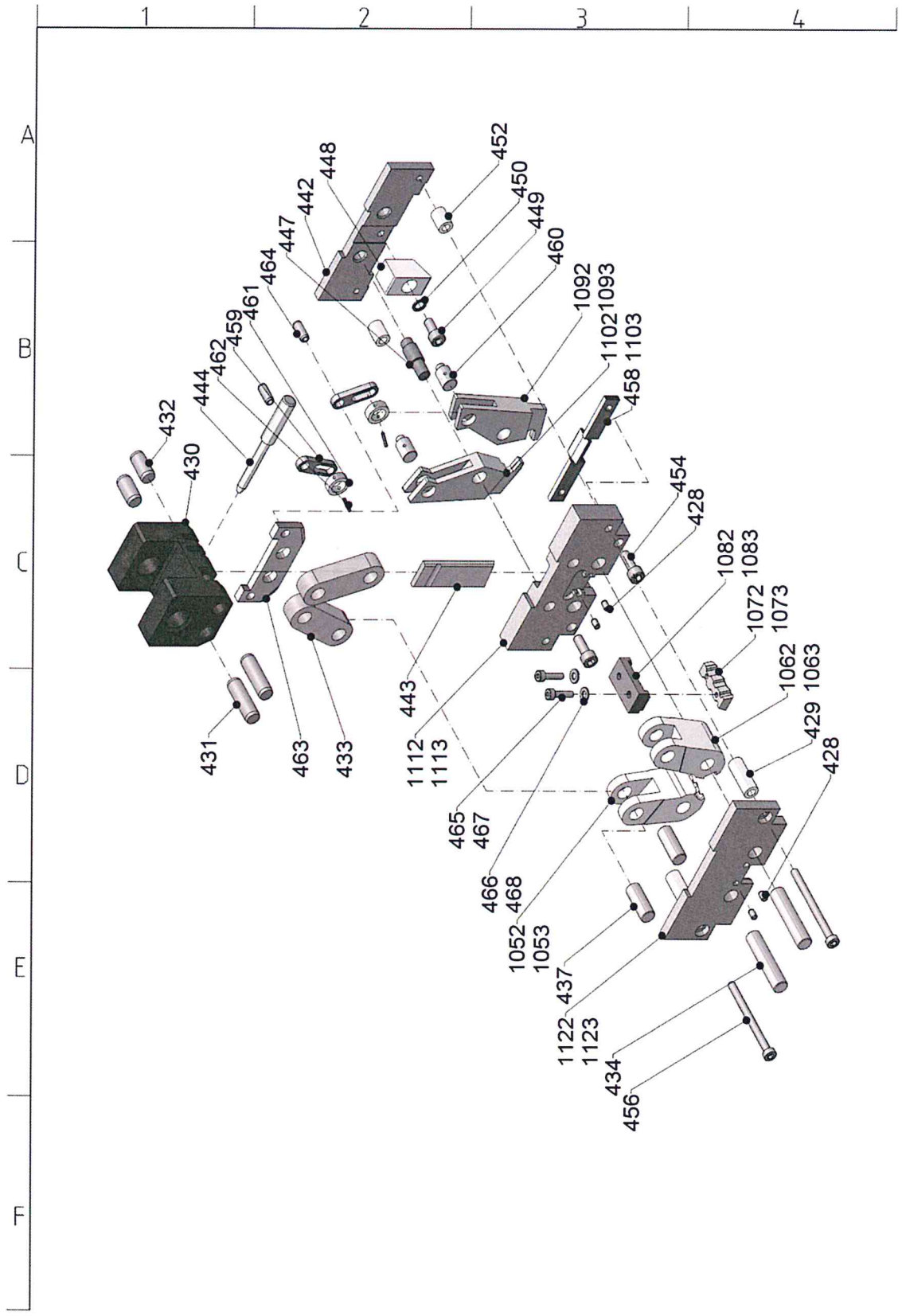

1.8. Kopfabschaltung / Head deactivation / Tête dé branchement

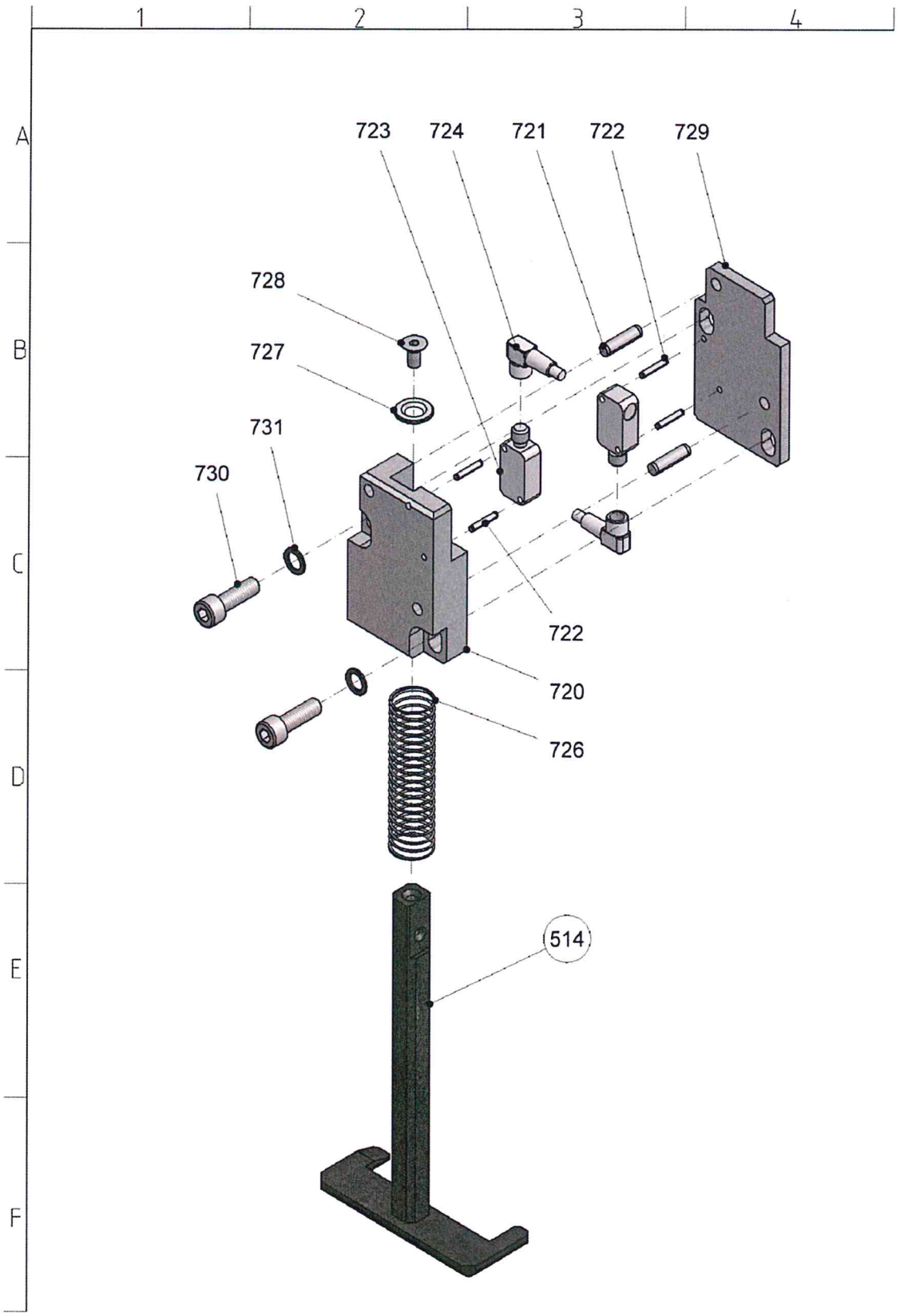

2. Antrieb / Drive / Entraînment

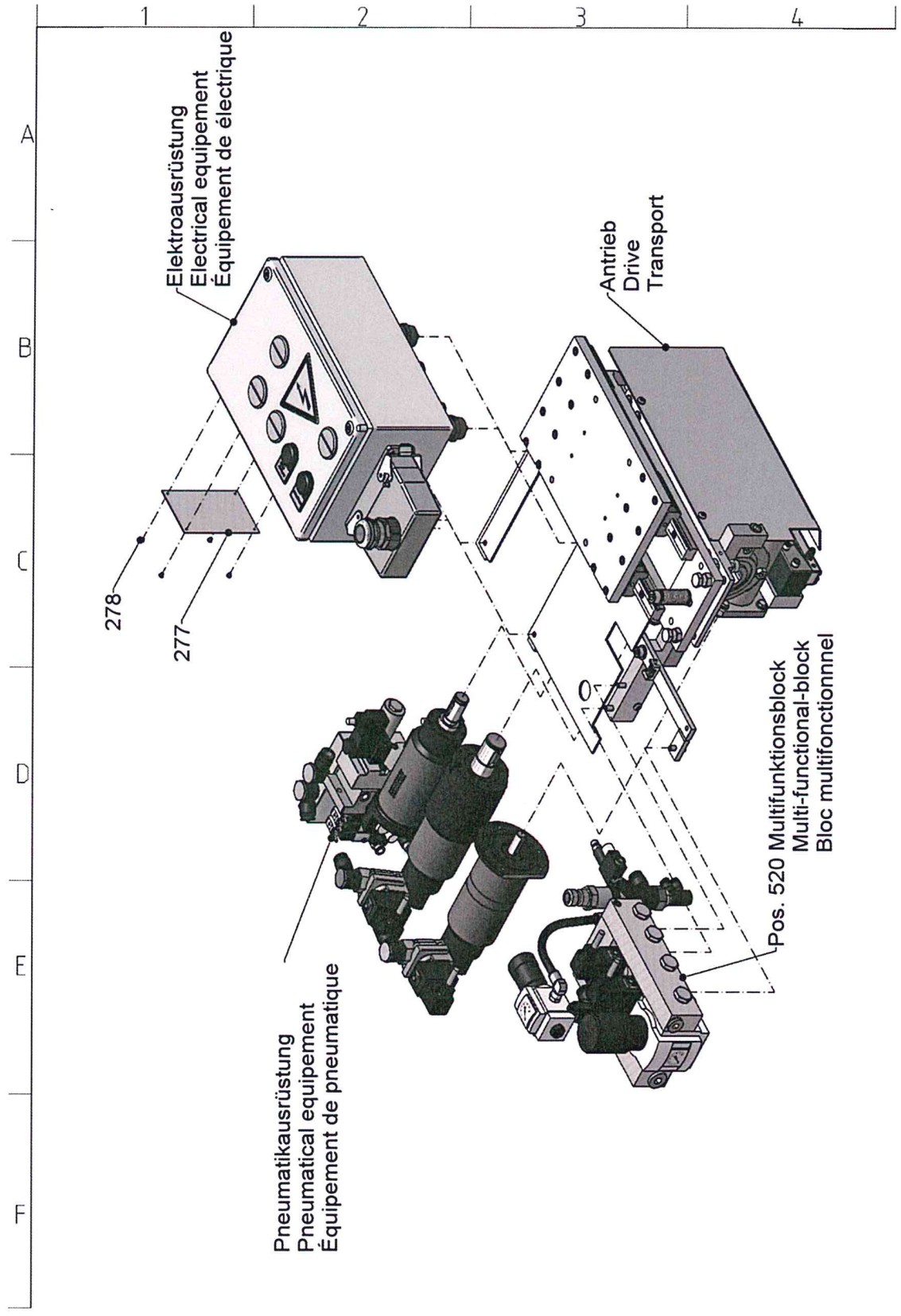

2.1. Kopfaufhängung / Head suspension / Suspension de tête

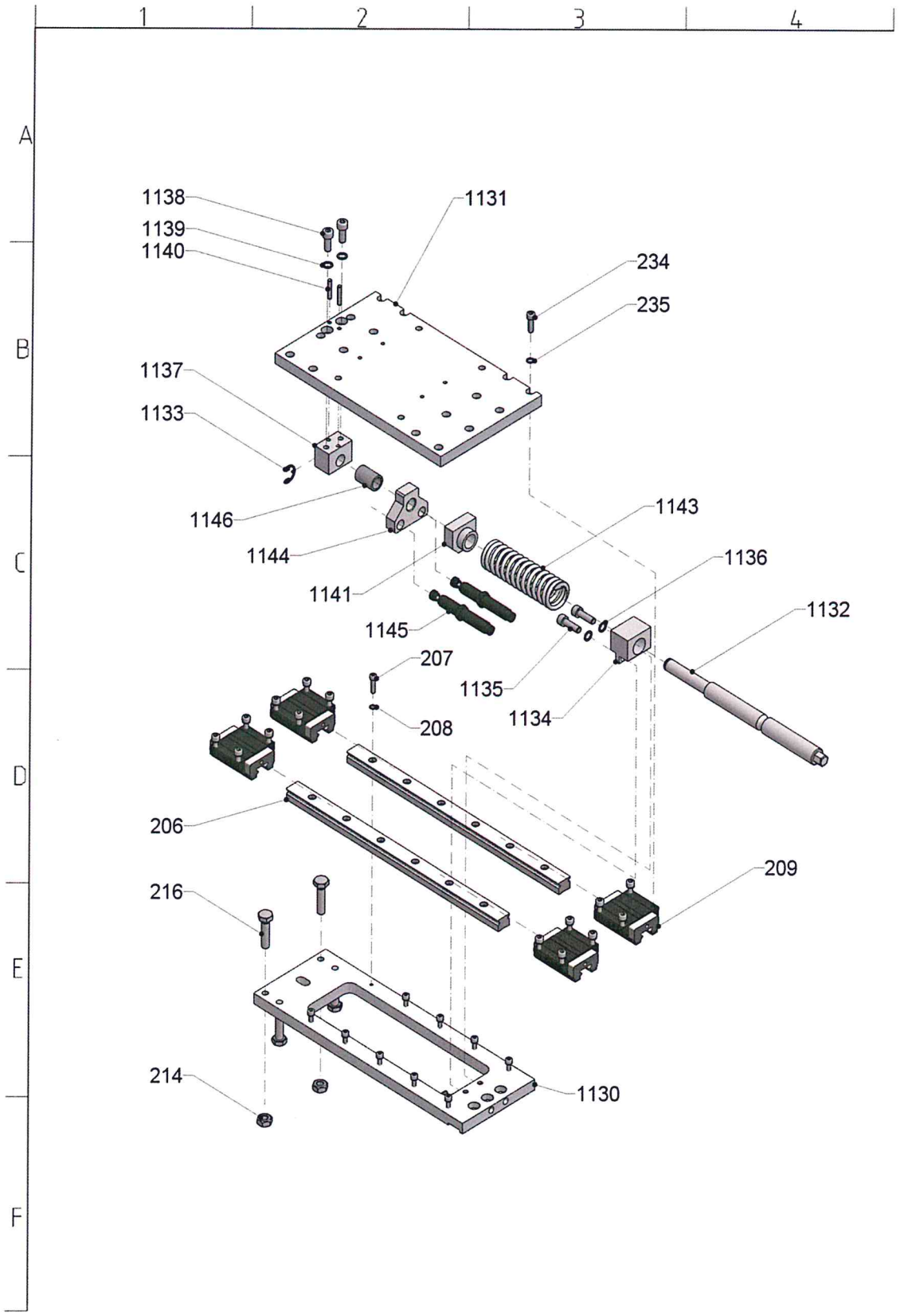

2.2. Anbauteile Antrieb / Attachment parts drive / Piéces á ajouterde entraînment

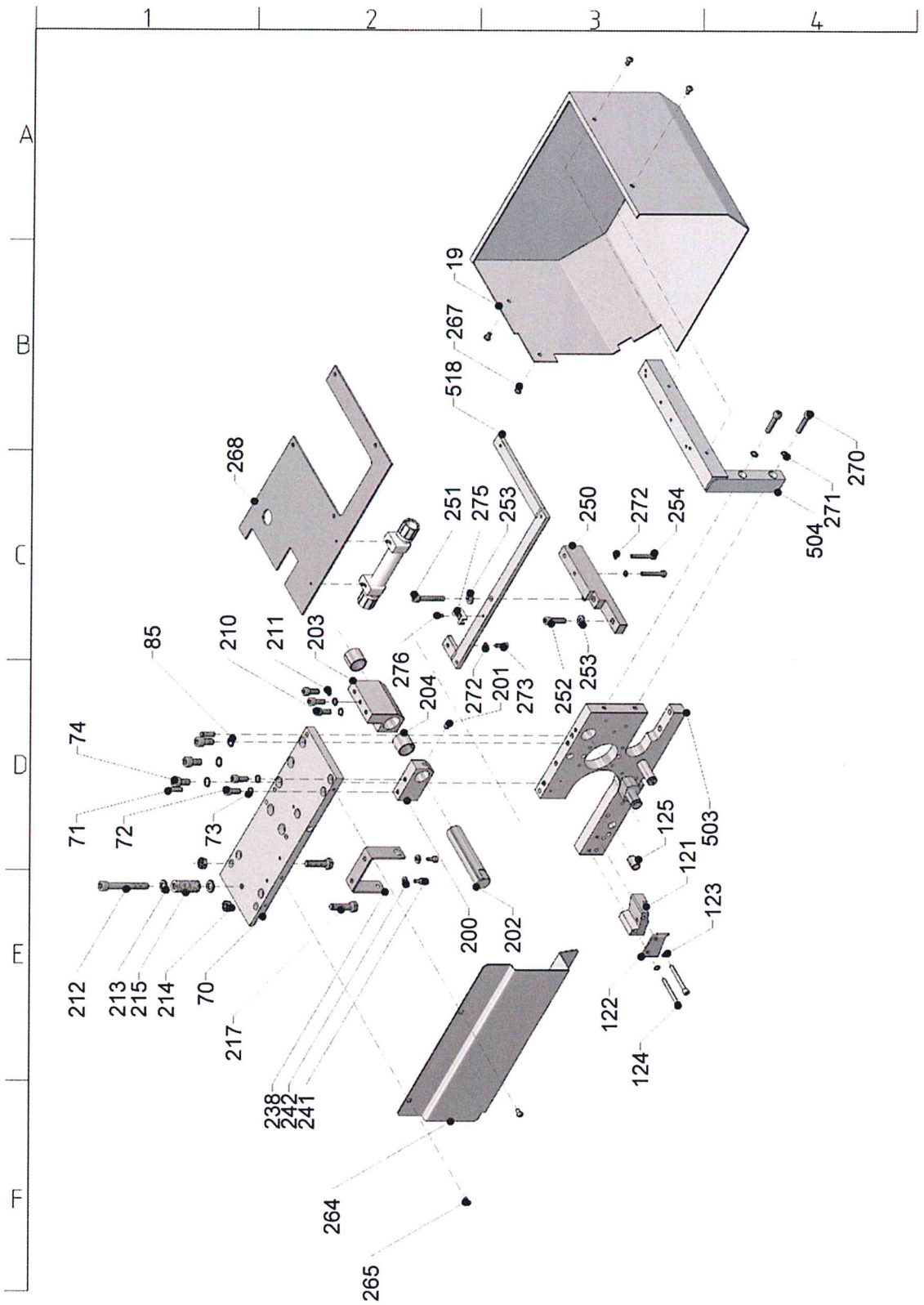

2.3. Transportantrieb / Transport / Transport

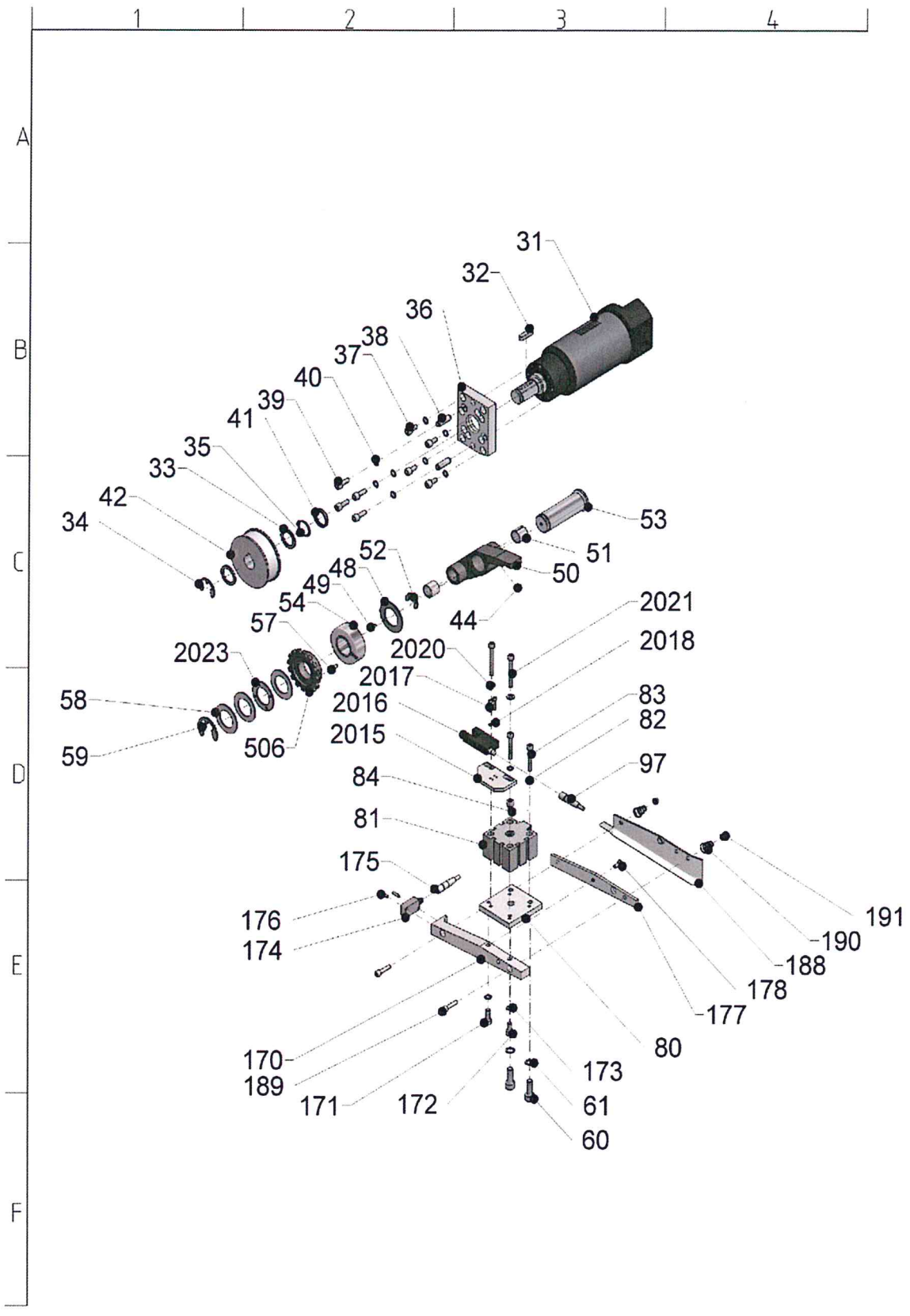

2.4. Spannantrieb / Tensioning system / Entraînement du serrage

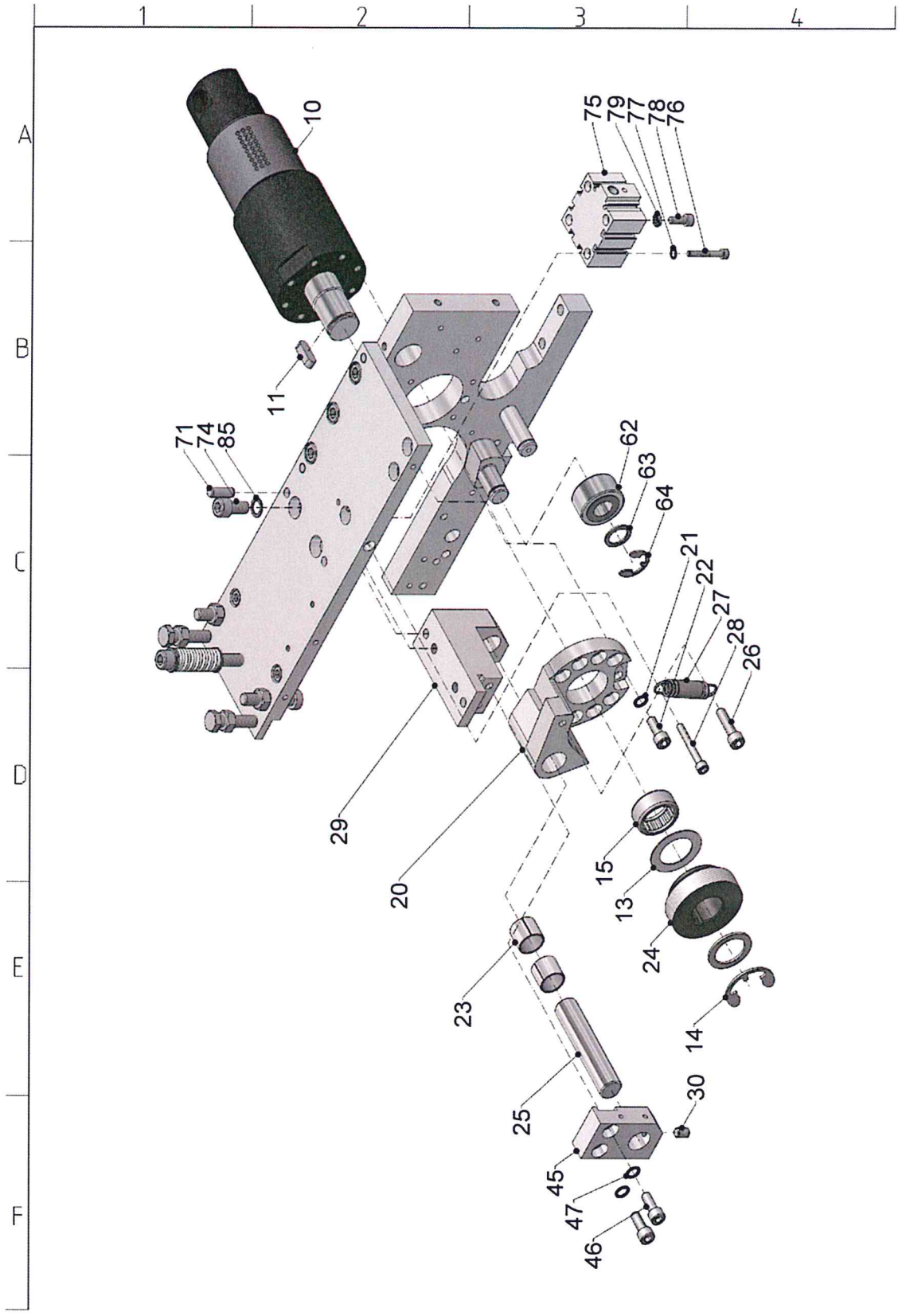

2.5. Bandanhängige Teile 16mm - 19mm / Strap depending Parts 5/8"-3/4 / Part tributaire defeuillard 16mm – 19mm

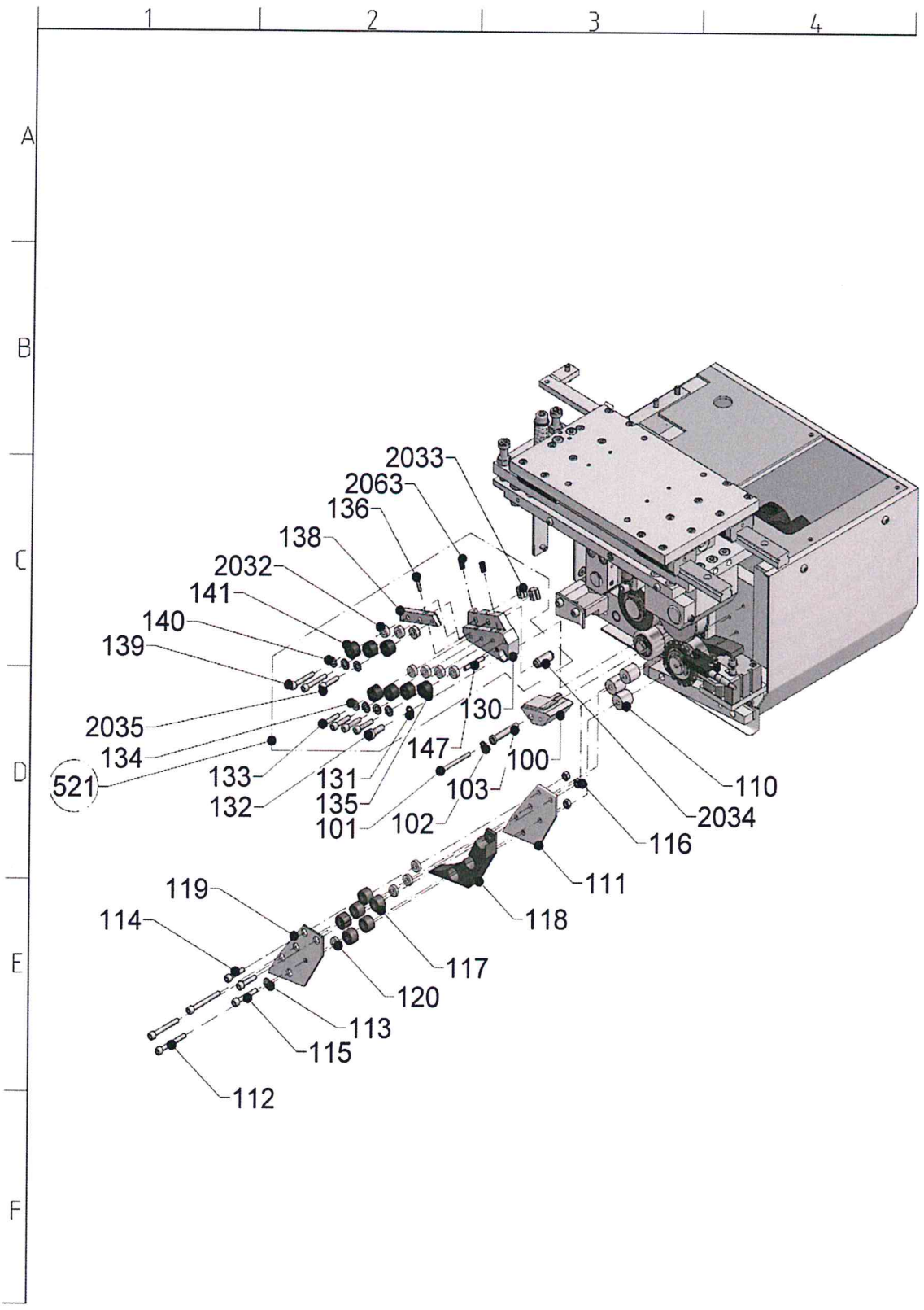

2.6. Bandanhängige Teile 13mm / Strap depending Parts 1 / 2“ / Part tributaire defeuillard 13mm

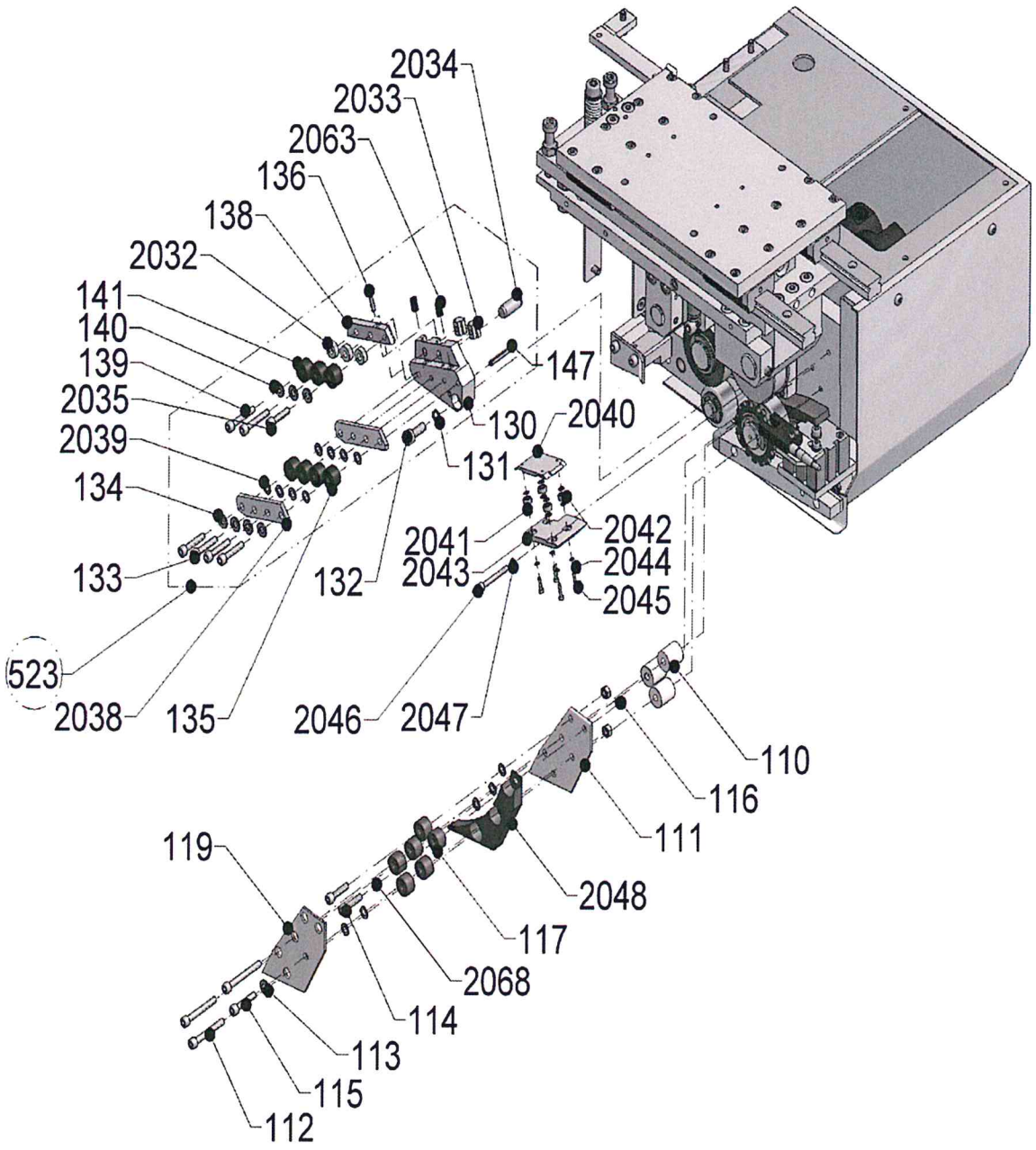

2.7. Pneumatikausrüstung / Pneumatic equipment / Équipement de pneumatique

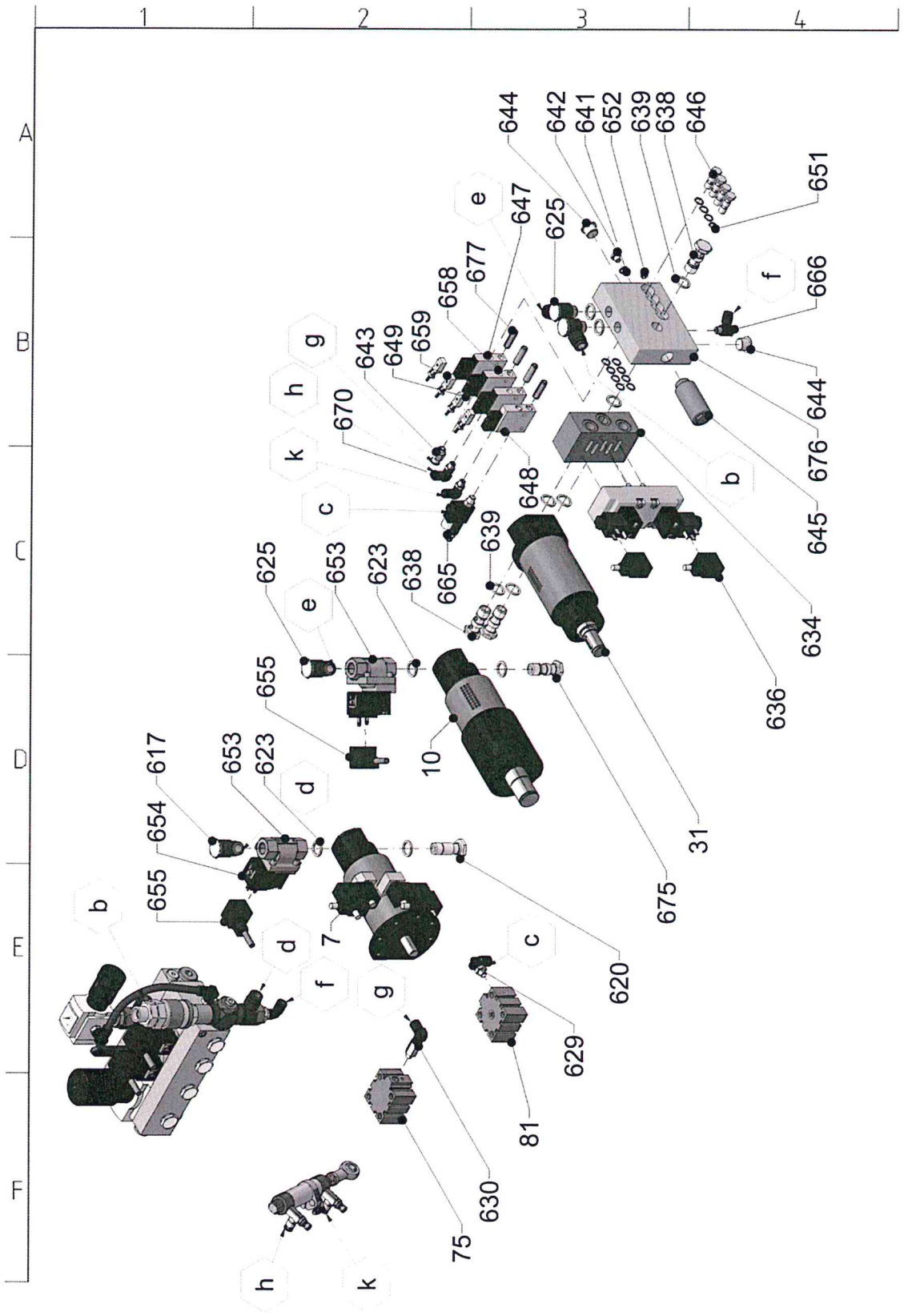

2.7.1. Pneumatikplan/pneumatic plan/équipement pneumatique

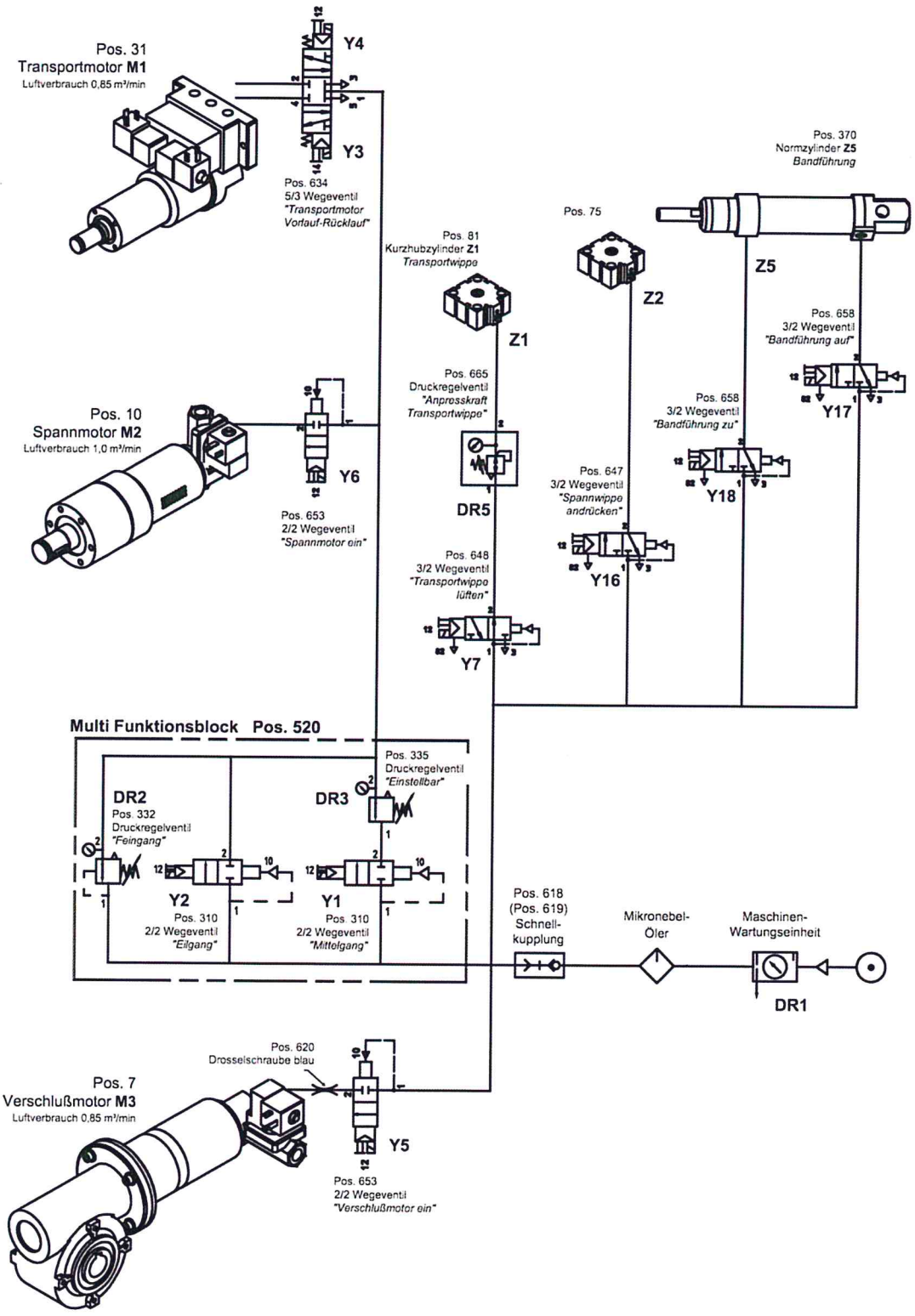

	Translation key	Traduction
Schnellkupplung	Fast coupling	raccord rapide
Mikronebel-Öler	Fine mist oiler	Huileur
Drosselschraube blau	Throttle screw blue	Commande de puissance bleu
Multi-Funktionsblock	Multi functional block	Bloc multifonctions
M1	Transport motor	moteur de transport
M2	Tension motor	moteur de serrage
M3	Sealing motor	moteur de fermeture
Z1	Short stroke cylinder Transport compensator	Cylindre de pression Bascule de transport
Z5	Standard cylinder Strap guide	Cylindre guidage de bande
DR1	Machine maintenance unit	unité de maintenance de la machine
DR2	Pressure control valve Precision motion	vanne de régulation de pression basse vitesse
DR3	Pressure control valve Adjustable	vanne de régulation de pression réglable
DR5	Pressure control valve Clamping force transport compensator	vanne de régulation de pression force de contact Bascule de transport
Y1	2/2 Distribution valve Medium speed	distributeur 2/2 voies vitesse moyenne
Y2	2/2 Distribution valve Fast speed	distributeur 2/2 voies vitesse supérieure
Y3/Y4	5/3 Distribution valve Transport motor forerun – return	distributeur 5/3 voies Moteur de transport Avance/ Retour
Y5	2/2 Distribution valve Sealing motor ON	distributeur 2/2 voies Moteur de fermeture ON
Y6	2/2 Distribution valve Tension motor ON	distributeur 2/2 voies Moteur de serrage ON
Y7	3/2 Distribution valve Ventilation transport compensator	distributeur 3/2 voies soulever Bascule de transport
Y16	3/2 Distribution valve Press on tension compensator	distributeur 3/2 voies Bascule de serrage pressé
Y17	3/2 Distribution valve Strap guide open	distributeur 3/2 voies guidage de bande ouvrir
Y18	3/2 Distribution valve Strap guide closed	distributeur 3/2 voies guidage de bande fermée

2.8. Multifunktionsblock / Multi functional block / Bloc multifunctionnel

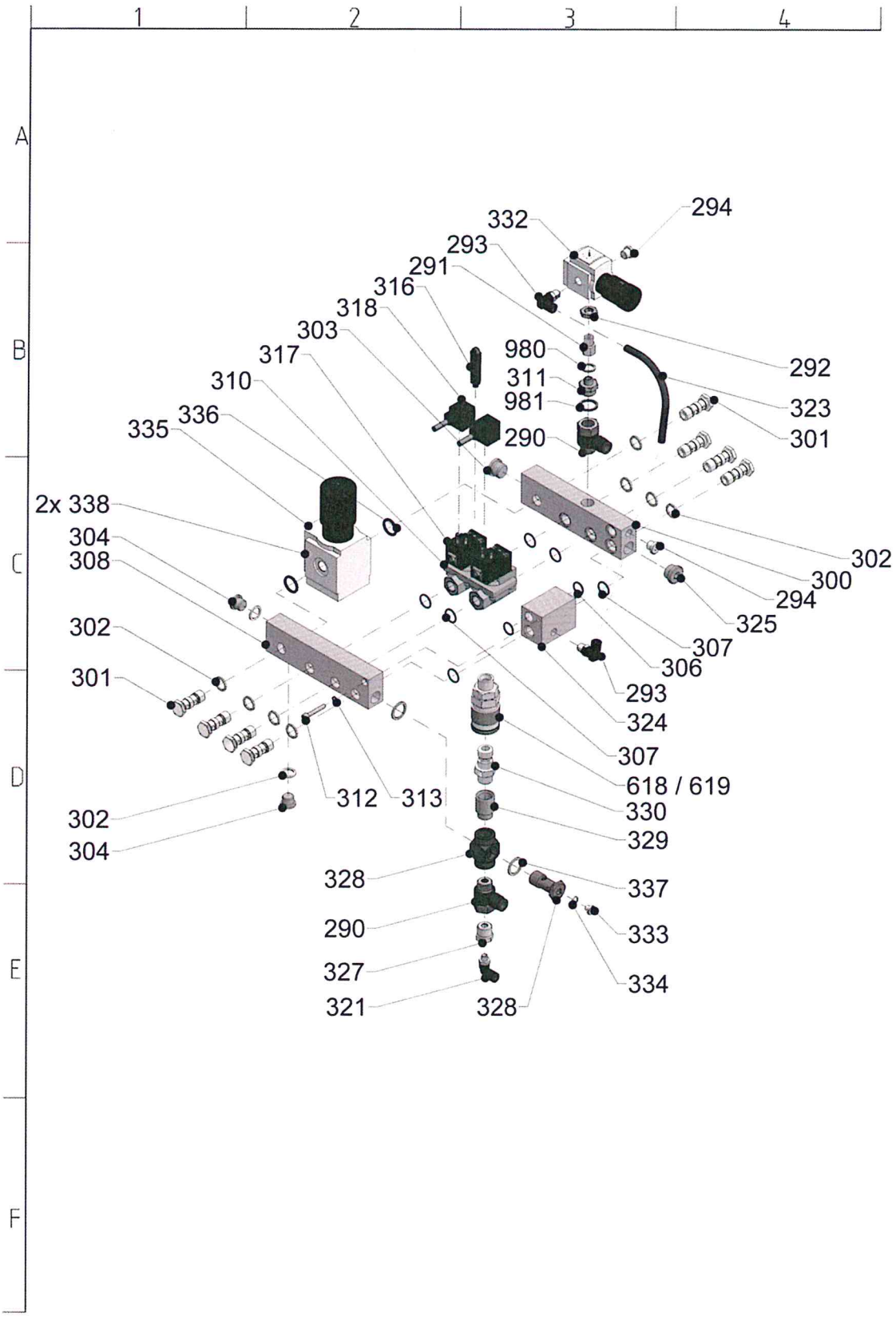

2.9. Elektroausrüstung / Electrical equipment / Équipement de électrique

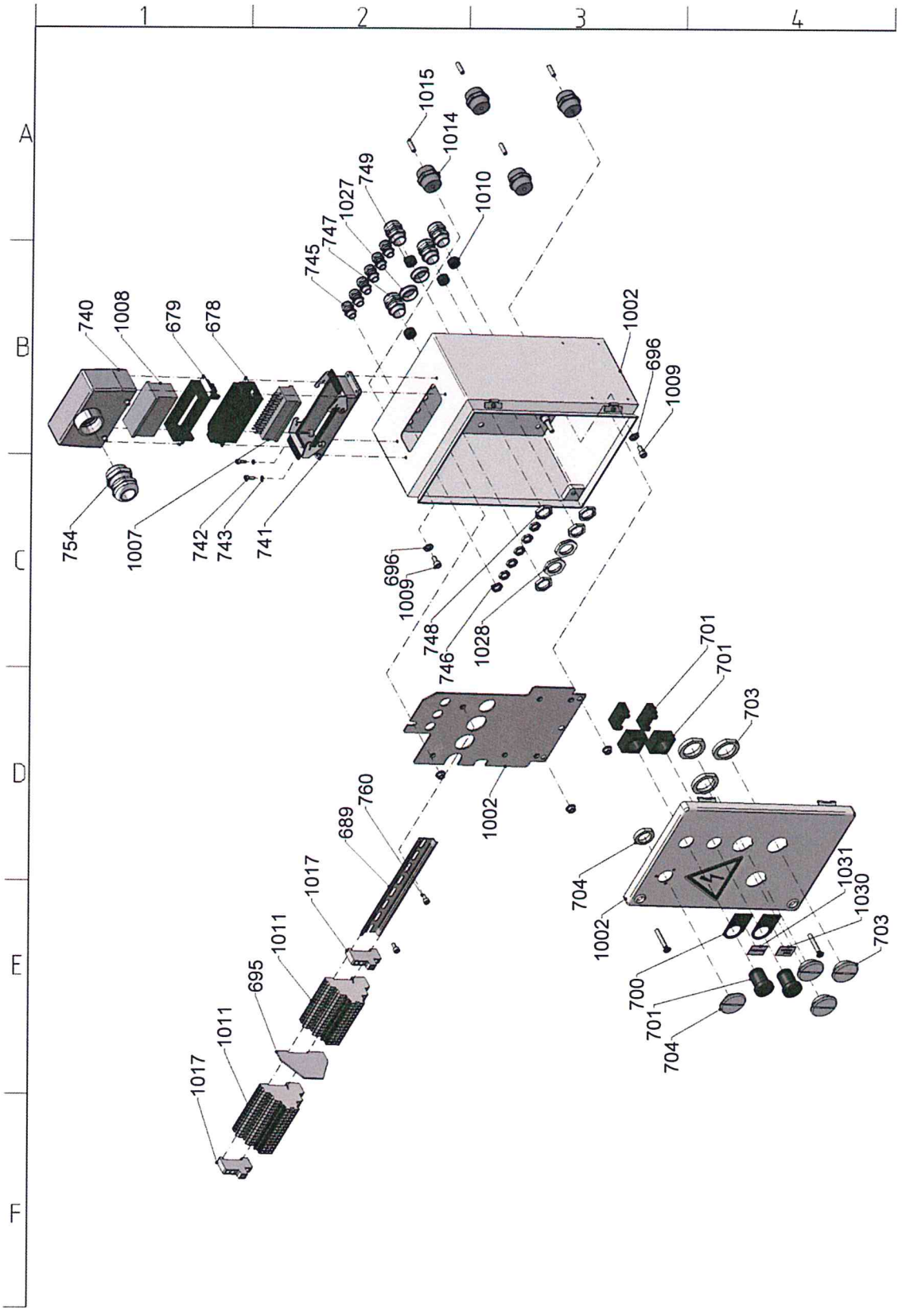

2.10.Anbauteile / Attachment parts / Piéces á ajouter

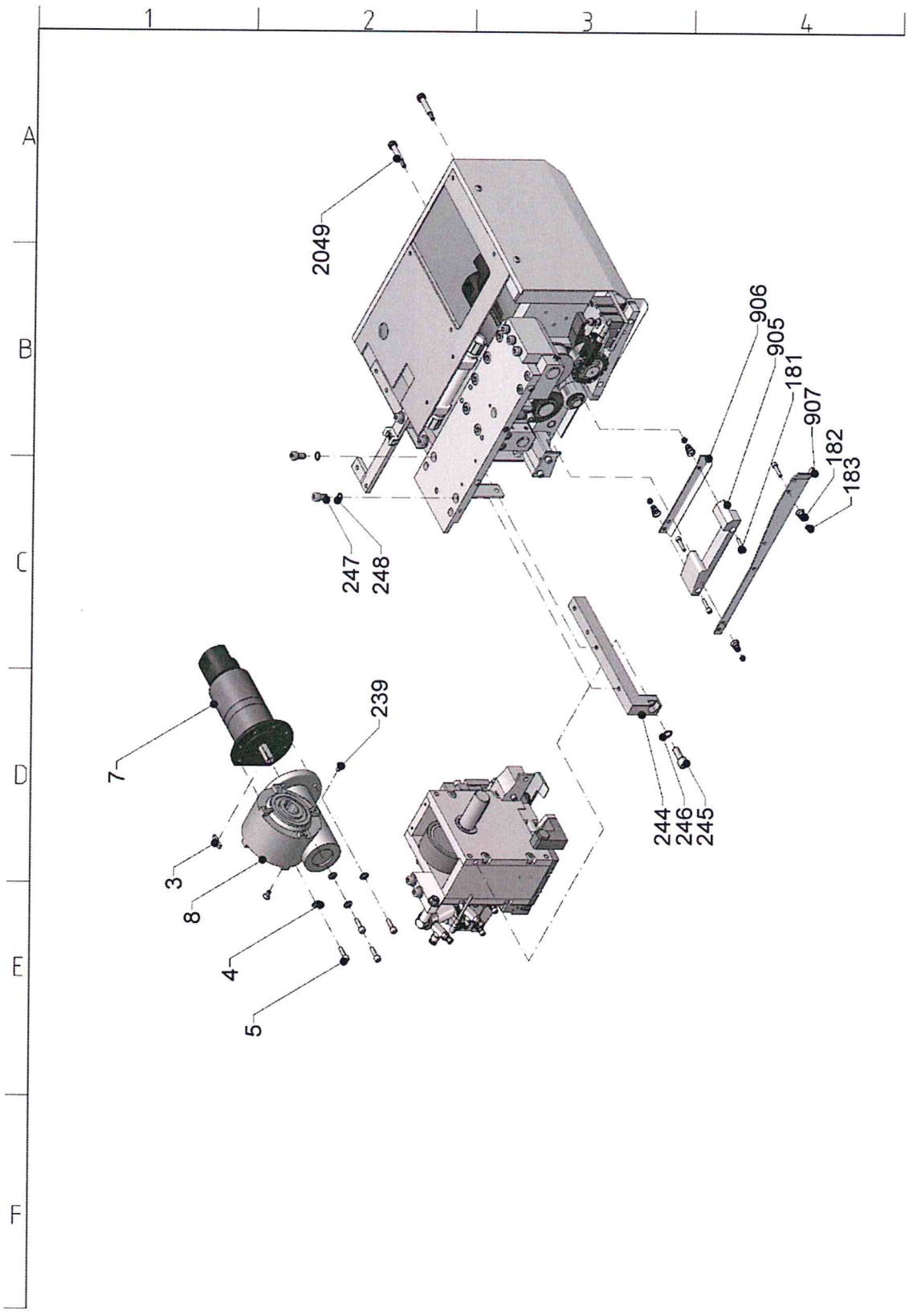

3. Ersatzteilliste, Spare Parts list, Liste des pièces de rechange

Pos	Bestell-Nr. Order code N° cde	Benennung	Description	Dénomination	St. Pcs. Pc.	
3	010003 – 3	DIN 6885 A - 5x5x25	DIN 6885 A - 5x5x25	DIN 6885 A - 5x5x25	1	
4	010003 – 4	DIN 6796 - 6	DIN 6796 - 6	DIN 6796 - 6	4	
5	010003 – 5	DIN 933 - M6x20	DIN 933 - M6x20	DIN 933 - M6x20	4	
7	010003 – 7	Nockenwerkmotor	Cam gear motor	Motuer système à cames	1	
8	010003 – 8	Schneckengetriebe	Worm gear unit	Engrenage à vis sans fin	1	
10	010003 – 10	Spannmotor	Tensioning motor	Motuer de tension	1	
11	010003 – 11	DIN 6885 A - 8x7x25	DIN 6885 A - 8x7x25	DIN 6885 A - 8x7x25	1	V
12	010003 – 12	DIN 988 S28x40x2	DIN 988 S28x40x2	DIN 988 S28x40x2	1	V
13	010003 – 13	Axialscheibe AS3047	Axial disc AS3047	Plaque axiale AS3047	1	V
14	010003 – 14	DIN 6799 - 24	DIN 6799 - 24	DIN 6799 - 24	1	
15	010003 – 15	Nadelhülse DL3016	Needle sleeve DL3016	Douille d'aguille DL3016	1	
19	**010003 – 19**	**Schutzhaube**	**Protective cover**	**Couvercle protecteur**	**1**	
20	**010003 – 20**	**Spannwippe**	**Tensioning rocker**	**Bascule de tension**	**1**	
21	010003 – 21	Sicherungsscheibe S8	Thrust washer S8	Rondelle d'arrêt S8	3	
22	010003 – 22	ISO 4762 - M8x20	ISO 4762 - M8x20	ISO 4762 - M8x20	3	
23	010003 – 23	DU-Buchse 2020DU	DU-bushing 2020DE	DU-boîte 2020DE	2	
24	**010003 – 24**	**Spannrad**	**Tensioning wheel**	**Roue de tension**	**1**	**V**
25	**010003 – 25**	**Achse 1**	**Axle 1**	**Arbre 1**	**1**	
26	010003 – 26	ISO 4762 - M8x30	ISO 4762 - M8x30	ISO 4762 - M8x30	1	
27	010003 – 27	Zugfeder	Tension Spring	Ressort de traction	1	
28	010003 – 28	ISO 4762 - M6x45	ISO 4762 - M6x45	ISO 4762 - M6x45	1	
29	**010003 – 29**	**Lagerbock**	**Pedestal**	**Palier**	**1**	
30	010003 – 30	DIN 913 - M8x12	DIN 913 - M8x12	DIN 913 - M8x12	1	
31	010003 – 31	Transportmotor	Transport motor	Moteur de transport	1	
32	010003 – 32	DIN 6885 A - 6x6x25	DIN 6885 A - 6x6x25	DIN 6885 A - 6x6x25	1	V
33	**010003 – 33**	DIN 988 - 20x28x2	DIN 988 - 20x28x2	DIN 988 - 20x28x2	2	V
34	010003 – 34	DIN 6799 - 15	DIN 6799 - 15	DIN 6799 - 15	1	V
35	010003 – 35	DIN 471 - 20x1,2	DIN 471 - 20x1,2	DIN 471 - 20x1,2	1	
36	**010003 – 36**	**Lagerschild**	**Bearing plate**	**Flasque**	**1**	
37	010003 – 37	ISO 4762 - M6x12	ISO 4762 - M6x12	ISO 4762 - M6x12	4	
38	010003 – 38	ISO 8734 - 8m6x24	ISO 8734 - 8m6x24	ISO 8734 - 8m6x24	2	
39	010003 – 39	ISO 4762 - M6x16	ISO 4762 - M6x16	ISO 4762 - M6x16	4	
40	010003 – 40	Sicherungsscheibe S6	Thrust washer S6	Rondelle d'arrêt S6	8	
41	010003 – 41	Dichtring	Sealing ring	Bague d'étanchéité	1	

V = Verschleißteile ; Wearing parts ; Pièces de rechange
R = Austauschteile ; Replacement parts ; Pièces d'échange
B = bei Bedarf ; If necessary ; Au besoin
O = Option ; Option ; Option

Pos.	Bestell-Nr. Order code N° cde	Benennung	Description	Dénomination	St. Pcs. Pc.	
42	**010003 – 42**	**Transportrolle**	**Conveying roller**	**Galet de roulement**	**1**	**V**
44	**010003 – 42**	DIN 913 - M6x8	DIN 913 - M6x8	DIN 913 - M6x8	1	
45	**010003 – 45**	**Lagerdeckel**	**Cap piece of the bearing**	**Cannette**	**1**	
46	010003 – 46	ISO 4762 - M8x20	ISO 4762 - M8x20	ISO 4762 - M8x20	2	
47	010003 – 47	Sicherungsscheibe S8	Thrust washer S8	Rondelle d'arrêt S8	2	
48	010003 – 48	DU-Anlaufscheibe WC24DE	DU-Washer WC24DU	DU-Glace d'approche WC24DU	1	
49	010003 – 49	ISO 8752 - 3x8	ISO 8752 - 3x8	ISO 8752 - 3x8	1	
50	**010003 – 50**	**Transportschwinge**	**Conveying rocker**	**Aile de transport**	**1**	
51	010003 – 51	DU-Buchse 1615DU	DU-bushing 1615DU	DU-boîte 1615DU	2	
52	010003 – 52	DIN 6799 - 12	DIN 6799 - 12	DIN 6799 - 12	1	
53	**010003 – 53**	**Achse 2**	**Axle 2**	**Arbre 2**	**1**	
54	**010003 – 54**	**Stützrolle**	**Supporting roller**	**Rouleau d'appui**	**1**	**V**
57	010003 – 57	ISO 8752 - 4x12	ISO 8752 - 4x12	ISO 8752 - 4x12	1	
58	010003 – 58	Axialscheibe AS2542	Axial disk AS2542	Plaque axiale AS2542	3	V
59	010003 – 59	DIN 6799 - 19	DIN 6799 - 19	DIN 6799 - 19	1	V
60	010003 – 60	ISO 4762 - M8x22	ISO 4762 - M8x22	ISO 4762 - M8x22	2	
61	010003 – 61	Sicherungsscheibe S8	Thrust washer S8	Rondelle d'arrêt S8	2	
62	010003 – 62	Laufrolle FG1740EE	Roller FG1740EE	Galet de roulement FG1740EE	1	V
63	010003 – 63	DIN 988 - S17x24	DIN 988 - S17x24	DIN 988 - S17x24	1	V
64	010003 – 64	DIN6799 - 15	DIN6799 - 15	DIN6799 - 15	1	V
70	**010003 – 70**	**Deckplatte**	**Cover plate**	**Plaque de couvertre**	**1**	
71	010003 – 71	ISO 8734 - 8m6x24	ISO 8734 - 8m6x24	ISO 8734 - 8m6x24	4	
72	010003 – 72	ISO 4762 - M8x20	ISO 4762 - M8x20	ISO 4762 - M8x20	2	
73	010003 – 73	Sicherungsscheibe S8	Thrust washer S8	Rondelle d'arrêt S8	2	
74	010003 – 74	ISO 4762 - M10x20	ISO 4762 - M10x20	ISO 4762 - M10x20	5	
75	010003 – 75	Kurzhubzylinder	Short stroke cylinder	Cylindre à faible course	1	
76	010003 – 76	ISO 4762 - M5x35	ISO 4762 - M5x35	ISO 4762 - M5x35	4	
77	010003 – 77	Sicherungsscheibe S5	Thrust washer S5	Rondelle d'arrêt S5	4	
78	010003 – 78	ISO 4762 - M6x16	ISO 4762 - M6x16	ISO 4762 - M6x16	1	
79	010003 – 79	DIN 439 - B - M6	DIN 439 - B - M6	DIN 439 - B - M6	1	
80	**010003 – 80**	**Zylinderplatte**	**Cylinder plate**	**Plaque de cylindre**	**1**	
81	010003 – 81	Kurzhubzylinder	Short stroke cylinder	Cylindre à faible course	1	
82	010003 – 82	Sicherungsscheibe S5	Thrust washer S5	Rondelle d'arrêt S5	2	
83	010003 – 83	ISO 4762 - M5x35	ISO 4762 - M5x35	ISO 4762 - M5x35	2	
84	010003 – 84	ISO 4762 - M6x12	ISO 4762 - M6x12	ISO 4762 - M6x12	17	

V = Verschleißteile ; Wearing parts ; Pièces de rechange
R = Austauschteile ; Replacement parts ; Pièces d'échange
B = bei Bedarf ; If necessary ; Au besoin
O = Option ; Option ; Option

Pos.	Bestell-Nr. Order code N° cde	Benennung	Description	Dénomination	St. Pcs. Pc
85	010003 – 85	Sicherungsscheibe S10	Thrust washer S10	Rondelle d'arrêt S10	5
97	010003 – 97	Kabeldose	Cable box	Boîte de câbles	1
100	**010003 – 100**	**Bandführungs-klotz**	**Band routing block**	**Bloc de guide de feuillard**	**1**
101	010003 – 101	ISO 4762 - M5x55	ISO 4762 - M5x55	ISO 4762 - M5x55	1
102	010003 – 102	DIN 6796 - 5	DIN 6796 - 5	DIN 6796 - 5	1
103	**010003 – 103**	**Distanz-büchse 1**	**Distance sleeve 1**	**Douille d'écartement1**	**1**
110	**010003 – 110**	**Distanz-büchse 2**	**Distance sleeve 2**	**Douille d'écartement 2**	**3**
111	**010003 – 111**	**Seitenführung rechts hinten**	**Side guidance right back**	**Guide latérale droite**	**1**
112	010003 – 112	ISO 4762 - M6x45	ISO 4762 - M6x45	ISO 4762 - M6x45	3
113	010003 – 113	DIN 6796 - 6	DIN 6796 - 6	DIN 6796 - 6	1
114	010003 – 114	ISO 4762 - M6x25	ISO 4762 - M6x25	ISO 4762 - M6x25	2
115	010003 – 115	ISO 4762 - M6x35	ISO 4762 - M6x35	ISO 4762 - M6x35	1
116	010003 – 116	ISO 4032 - M6	ISO 4032 - M6	ISO 4032 - M6	3
117	010003 – 117	Laufrolle FG619EE	Roller FG619EE	Galet de roulement FG619EE	6
118	**010003 – 118**	**Bandführung**	**Band guidance**	**Guide de feuillard**	**1**
119	**010003 – 119**	**Seitenführung hinten links**	**Side guidance left back**	**Guide latérale gauche**	**1**
120	**010003 – 120**	**Distanzscheibe**	**Distance washer**	**Rondelle d'écartement**	**7**
121	**010003 – 121**	**Führung, vorn**	**Guidance, front**	**Guide, avant**	**1**
122	**010003 – 122**	**Seitenführung, vorn**	**Side guidance, front**	**Guide latéral, avant**	**1**
123	010003 – 123	Sicherungsscheibe S6	Thrust washer S6	Rondelle d'arrêt S6	2
124	010003 – 124	ISO 4762 - M6x55	ISO 4762 - M6x55	ISO 4762 - M6x55	2
125	010003 – 125	DU-Buchse 1220DU	DU-bushing 1220DU	DU-boîte 1220DU	1
130	**010003 – 130**	**Richtrollenhalter**	**Roller holding device**	**Appui à galet**	**1**
131	**010003 – 131**	**Sicherungsscheibe S8**	**Thrust washer S8**	**Rondelle d'arrêt S8**	**1**
132	010003 – 132	ISO 4762 - M8 x 20	ISO 4762 - M8 x 20	ISO 4762 - M8 x 20	1
133	010003 – 133	ISO 4762 - M6x25	ISO 4762 - M6x25	ISO 4762 - M6x25	4
134	010003 – 134	DIN 6796 - 6	DIN 6796 - 6	DIN 6796 - 6	4
135	010003 – 135	Laufrolle FG619EE	Roller FG619EE	Galet de roulement FG619EE	4
136	010003 – 136	ISO 4762 - M4x16	ISO 4762 - M4x16	ISO 4762 - M4x16	1
138	**010003 – 138**	**Rollenhalter**	**Roller holding device**	**Appui à galet**	**1**
139	010003 – 139	ISO 4762 - M6x35	ISO 4762 - M6x35	ISO 4762 - M6x35	3

V = Verschleißteile ; Wearing parts ; Pièces de rechange
R = Austauschteile ; Replacement parts ; Pièces d'échange
B = bei Bedarf ; If necessary ; Au besoin
O = Option ; Option ; Option

Pos.	Bestell-Nr. Order code N° cde	Benennung	Description	Dénomination	St. Pcs. Pc.	
140	010003 – 140	DIN 6796 - 6	DIN 6796 - 6	DIN 6796 - 6	3	
141	010003 – 141	Laufrolle FG619EE	Roller FG619EE	Galet de roulement FG619EE	3	
147	010003 – 147	ISO 8750 - 5x28	ISO 8750 - 5x28	ISO 8750 - 5x28	1	
170	**010003 – 170**	**Kanalrücken hinten**	**Channelback rear**	**Canal dorsal derrière**	**1**	
171	010003 – 171	ISO 4762 - M6x16	ISO 4762 - M6x16	ISO 4762 - M6x16	1	
172	010003 – 172	ISO 4762 - M6x12	ISO 4762 - M6x12	ISO 4762 - M6x12	1	
173	010003 – 173	Sicherungsscheibe S6	Thrust washer S6	Rondelle d'arrêt S6	2	
174	010003 – 174	Näherungsschalter	Proximity switch	Détecteur de proximité	1	
175	010003 – 175	Kabeldose	Cable box	Boîte de câbles	1	
176	010003 – 176	ISO 13337 - 3x12	ISO 13337 - 3x12	ISO 13337 - 3x12	2	
177	**010003 – 177**	**Seitenführung**	**Side guidance**	**Guide latérale**	**1**	
178	010003 – 178	ISO 10642 - M5x12	ISO 10642 - M5x12	ISO 10642 - M5x12	1	
181	**010003 – 181**	**Federschraube**	**Spring screw**	**Vis à ressort**	**2**	V
182	010003 – 182	Kegelfeder	Conical wire spring	Plume de cône	2	
183	010003 – 183	ISO 10511 - M5	ISO 10511 - M5	ISO 10511 - M5	2	
188	**010003 – 188**	**Kanalklappe rechts hinten**	**Channel flap back right**	**Couvercle du canal droit derrieère**	**1**	**V**
189	**010003 – 189**	**Federschraube**	**Spring screw**	**Vis à ressort**	**2**	
190	010003 – 190	Kegelfeder	Conical wire spring	Plume de cône	2	
191	010003 – 191	DIN 985 - M5	DIN 985 - M5	DIN 985 - M5	2	
200	**010003 – 200**	**Lagerklotz**	**Bearing block**	**Bloc de stockage**	**1**	
201	010003 – 201	ISO 913 - M8x12	ISO 913 - M8x12	ISO 913 - M8x12	1	
202	**010003 – 202**	**Achse**	**Axle**	**Arbre**	**1**	
203	**010003 – 203**	**Auflage**	**Support**	**Appui**	**1**	
204	010003 – 204	DU-Buchse 2525DU	DU-bushing 2525DU	DU-boîte 2525DU	2	
206	010003 – 206	Führungsschiene	Guidance rail	Bande de guidage	2	
207	010003 – 207	ISO 4762 - M5 x 20	ISO 4762 - M5 x 20	ISO 4762 - M5 x 20	10	
208	010003 – 208	Sicherungsscheibe S5	Thrust washer S5	Rondelle d'arrêt S5	10	
209	010003 – 209	Führungswagen	Guidance carriage	Chariot de guidange	4	
210	010003 – 210	ISO 4762 - M8x20	ISO 4762 - M8x20	ISO 4762 - M8x20	3	
211	010003 – 211	Sicherungsscheibe S8	Thrust washer S8	Rondelle d'arrêt S8	3	
212	010003 – 212	ISO 4762 - M10x80	ISO 4762 - M10x80	ISO 4762 - M10x80	1	
213	010003 – 213	ISO 7090 – 10,5	ISO 7090 – 10,5	ISO 7090 – 10,5	2	
214	010003 – 214	ISO 4032 - M10	ISO 4032 - M10	ISO 4032 - M10	4	
215	010003 – 215	Druckfeder	Pressure Spring	Ressort à pression	1	
216	010003 – 216	ISO 4017 - M10 x 40	ISO 4017 - M10 x 40	ISO 4017 - M10 x 40	2	
217	010003 – 217	ISO 4762 - M10x50	ISO 4762 - M10x50	ISO 4762 - M10x50	2	

V = Verschleißteile ; Wearing parts ; Pièces de rechange
R = Austauschteile ; Replacement parts ; Pièces d'échange
B = bei Bedarf ; If necessary ; Au besoin
O = Option ; Option ; Option

Pos.	Bestell-Nr. Order code N° cde	Benennung	Description	Dénomination	St. Pcs. Pc.	
234	010003 – 234	ISO 4762 - M6x20	ISO 4762 - M6x20	ISO 4762 - M6x20	16	
235	010003 – 235	Sicherungsscheibe S6	Thrust washer S6	Rondelle d'arrêt S6	16	
238	**010003 – 238**	**Drehmomentstütze**	**Torque support**	**Appui dynamométrique**	**1**	
239	010003 – 239	ISO 10642 - M6x12	ISO 10642 - M6x12	ISO 10642 - M6x12	2	
241	010003 – 241	ISO 4762 - M6x12	ISO 4762 - M6x12	ISO 4762 - M6x12	2	
242	010003 – 242	DIN 6796 - 6	DIN 6796 - 6	DIN 6796 - 6	2	
244	**010003 - 244**	**Brücke**	**Bridge**	**Pont**	**1**	
245	010003 – 245	ISO 4762 - M10x25	ISO 4762 - M10x25	ISO 4762 - M10x25	1	
246	010003 – 246	Sicherungsscheibe S10	Thrust washer S10	Rondelle d'arrêt S10	1	
247	010003 – 247	ISO 4762 - M8x16	ISO 4762 - M8x16	ISO 4762 - M8x16	2	
248	010003 - 248	Sicherungsscheibe S8	Thrust washer S8	Rondelle d'arrêt S8	2	
250	**010003 – 250**	**Verbindungsstück**	**Connection element**	**Raccord**	**1**	
251	010003 – 251	ISO 4762 - M8x30	ISO 4762 - M8x30	ISO 4762 - M8x30	1	
252	010003 – 252	ISO 4762 - M8x30	ISO 4762 - M8x30	ISO 4762 - M8x30	1	
253	010003 – 253	DIN 6796 - 8	DIN 6796 - 8	DIN 6796 - 8	2	
254	010003 – 254	ISO 4762 - M6x40	ISO 4762 - M6x40	ISO 4762 - M6x40	2	
264	**010003 - 264**	**Schutzblech, vorn**	**Protective plate, front**	**Tôle de protection, avant**	**1**	
265	010003 – 265	Linsenkopfschraube M6x8	Button socket head screw M6x8	Vis à tête bombée M6x8	2	
267	010003 – 267	Linsenkopfschraube M6x8	Button socket head screw M6x8	Vis à tête bombée M6x8	4	
268	**010003 – 268**	**Rückenblech**	**Back plate**	**Tôle dorsale**	**1**	
270	010003 – 270	ISO 4762 - M8x35	ISO 4762 - M8x35	ISO 4762 - M8x35	2	
271	010003 – 271	Sicherungsscheibe S8	Thrust washer S8	Rondelle d'arrêt S8	2	
272	010003 – 272	Sicherungsscheibe S6	Thrust washer S6	Rondelle d'arrêt S6	3	
273	010003 – 273	ISO 4762 - M6x16	ISO 4762 - M6x16	ISO 4762 - M6x16	1	
275	010003 – 275	Befestigungssockel	Fastening base	Base de fixation	1	
276	010003 – 276	ISO 4762 - M5x8	ISO 4762 - M5x8	ISO 4762 - M5x8	1	
277	010003 – 277	Schild Standard	Shield Standard	Taper signe	1	
278	010003 – 278	Blindniet - 3x8	Blind rivet - 3x8	Aveugle rivet - 3x8	4	
290	010003 – 295	T-Steck-verschraubung QSTF-G1/2-12	T connecting screwing QSTF-G1/2-12	Boulonnage de T-connect. QSTF-G1/2-12	2	

V = Verschleißteile ; Wearing parts ; Pièces de rechange
R = Austauschteile ; Replacement parts ; Pièces d'échange
B = bei Bedarf ; If necessary ; Au besoin
O = Option ; Option ; Option

Pos.	Bestell-Nr. Order code N° cde	Benennung	Description	Dénomination	St. Pcs. Pc.	
291	010003 – 295	Verl. Muffe	Extension	Allongement tétine	1	
292	010003 – 295	Mutter - G1/4“	Nut - G1/4“	Écrou - G1/4 »	1	
293	010003 – 295	L-Steck-verschraubung QSL-1/4-10	L connecting screwing QSL-1/4-10	Boulonnage de L-connect. QSL-1/4-10	2	
294	010003 – 295	Blindstopfen G1/4“	Blind plug G1/4”	Bouchon morte G1/4“	2	
300	**010003 – 300**	**Verteilerleiste, vorn**	**Distributing strip, front**	**Barre de distribution, avant**	**1**	
301	010003 – 301	Hohlschraube VT-3/8-2	Banjo bolt VT-3/8-2	Boulon à filet femelle VT-3/8-2	8	
302	010003 – 302	Dichtring O-3/8	Selaing ring O-3/8	Bague d'étanchéité O-3/8	10	
303	010003 – 303	Verschlussstopfe VSTI R1/2-EDn	Plug VSTI R1/2-ED	Bouchon de fermeture VSTI R1/2-ED	1	
304	010003 – 304	Blindstopfen B3/8“	Blind plug B3/8“	Bouchon morte B3/8“	2	
306	010003 – 306	O-Ring - 16x2	O-Ring - 16x2	O-boucle - 16x2	2	
307	010003 – 307	O-Ring - 18x2	O-Ring - 18x2	O-boucle - 18x2	6	
308	**010003 – 308**	**Verteilerleiste, hinten**	**Distributing strip, rear**	**Barre de distribution derrière**	**1**	
310	010003 – 310	2/2 Wege Magnetventil MN1H-2-3/8-MS	2/2-way solenoid valve MN1H-2-3/8-MS	2/2 Électrovanne MN1H-2-3/8-MS	2	
311	010003 – 311	Doppelnippel E1/4-1/2-M	Double nipple E1/4-1/2-M	Double raccord fileté E1/4-1/2-M	1	
312	010003 – 312	ISO 4762 - M6x35	ISO 4762 - M6x35	ISO 4762 - M6x35	1	
313	010003 – 313	Sicherungsscheibe S6	Thrust washer S6	Rondelle d'arrêt S6	1	
316	010003 – 316	Handbetätigung AHB-MD/MF/MV	Manual actuation AHB-MD/MF/MV	Service manuel AHB-MD/MF/MV	2	
317	010003 – 317	Magnetspule MSN1G-24	Magnet coil MSN1G-24	Bobine d'excitation MSN1G-24	2	
318	010003 – 318	Leitungsdose mit Leuchte MSUDS-AB1Z	Line socket incl. lamp MSUDS-AB1Z	Boîte de conduit av. luminaire MSUDS-AB1Z	2	
321	010003 – 321	L-Steckverschraubung QSL-1/8-8	L connecting screwing QSL-1/8-8	Boulonnage de L-connect. QSL-1/8-8	1	
323	**010003 – 323**	**Schlauch 8x1,25/40 lang**	**Hose 8x1,25/40 long**	**Tuyau 8x1,25/40 long**	**1**	
324	**010003 – 324**	**Verteilerleiste, rechts**	**Distributing strip, right**	**Barre de distribution, droite**	**1**	
325	**010003 – 325**	**Verschlussstopfen**	**Plug**	**Bouchon de fermeture**	**1**	

V = Verschleißteile ; Wearing parts ; Pièces de rechange
R = Austauschteile ; Replacement parts ; Pièces d'échange
B = bei Bedarf ; If necessary ; Au besoin
O = Option ; Option ; Option

Pos.	Bestell-Nr. Order code N° cde	Benennung	Description	Dénomination	St. Pcs. Pc.	
327	010003 – 327	Reduziernippel - R1/8"x1/8"	Reducing nipple - R1/2"x1/8"	Réduire raccord fileté - R1/2x1/8	1	
328	**010003 – 328**	**T-Steckverschrau-bung**	**T connecting screwing**	**Boulonnage de T-connect.**	**1**	
329	010003 – 329	Verlängerung - R1/2"x25	Extension - R1/2"x25	Allongement - R1/2x25	1	
330	010003 – 330	Stecknippel LP-012-1 WR	Plug-in nipple LP-012-1 WR	Nippel à fichet LP-012-1 WR	1	
332	010003 – 332	Druckregelventil MS4-LRB-1/4	Pressure control valve MS4-LRB-1/4	Vanne régulative de pression MS4-LRB-1/4	1	
333	010003 - 333	Blindstopfen B1/8"	Blind plug B1/8"	Bouchon morte - B1/8"	1	
334	010003 - 334	Dichtring O-1/8	Selaing ring O-1/8	Bague d'étanchéité O-1/8	1	
335	010003 – 335	Druckregelventil MS6-R3/8-D6-OS	Prssure contol valve MS6-LR3/8-D6-OS	Vanne régulative de pression MS6-L3/8-D6-OS	1	
336	010003 – 336	O-Ring - 20x3,5	O-Ring - 20x3,5	O-boucle - 20x3,5	2	
337	010003 – 337	ELASTO Dichtring G1/2"	ELASTO sealing ring G1/2"	ELASTO Bague d'étanchéité G1/2	2	
338	010003 – 338	Abdeckkappen MS6-END	Covers MS6-END	Paillage couper MS6-END	2	
340	**010003 – 340**	**Halter**	**Holder**	**Appui**	**1**	
341	010003 – 341	ISO 4762 - M8x70	ISO 4762 - M8x70	ISO 4762 - M8x70	2	
342	010003 – 342	Sicherungsscheibe S8	Thrust washer S8	Rondelle d'arrêt S8	2	
343	**010003 – 343**	**Leiste**	**Strip**	**Barre**	**2**	
344	010003 – 344	ISO 4762 - M8x16	ISO 4762 - M8x16	ISO 4762 - M8x16	4	V
345	010003 - 345	Sicherungsscheibe S8	Thrust washer S8	Rondele d'arrêt S8	4	V
346	**010003 – 346**	**Welle**	**Shaft**	**Arbre**	**1**	
347	010003 – 347	DIN 6885 A - 8x7x45	DIN 6885 A - 8x7x45	DIN 6885 A - 8x7x45	1	
348	010003 – 348	DIN 6799 - 19	DIN 6799 - 19	DIN 6799 - 19	3	
349	**010003 – 349**	**Exzenter**	**Eccentric**	**Excentrè**	**1**	
350	**010003 – 350**	**Schwinge**	**Rocker**	**Manivelle oscillante**	**1**	
351	010003 – 351	Nadelhülse HK6032	Needle sleeve HK6032	Douille d'aguille HK6032	1	
352	010003 – 352	ISO 8735 - 16x60C	ISO 8735 - 16x60C	ISO 8735 - 16x60C	1	
353	**010003 – 353**	**Bandführungshebel**	**Strap guiding lever**	**Levier de guide de feuillard**	**1**	
354	010003 – 354	Nadelhülse HK1010	Needle sleeve HK1010	Douille d"aguille HK1010	4	
355	010003 – 355	ISO 8734 10m6x20	ISO 8734 10m6x20	ISO 8734 10m6x20	1	

V = Verschleißteile ; Wearing parts ; Pièces de rechange
R = Austauschteile ; Replacement parts ; Pièces d'échange
B = bei Bedarf ; If necessary ; Au besoin
O = Option ; Option ; Option

Pos.	Bestell-Nr. Order code N° cde	Benennung	Description	Dénomination	St. Pcs. Pc.	
356	**010003 – 356**	**Schlepphebel**	**Towing lever**	**Levier d'entrainement**	**1**	
357	**010003 – 357**	**Hebelbrücke**	**Lever bridge**	**Levier de pont**	**1**	
358	010003 – 358	Nadelhülse HK1010	Needle sleeve HK1010	Douille d"aguille HK1010	2	
359	010003 – 359	ISO 8734 10m6x20	ISO 8734 10m6x20	ISO 8734 10m6x20	1	
360	**010003 – 360**	**Zylinderhalter**	**Cylinder holder**	**Appui de cylindre**	**1**	
361	010003 – 361	DIN 6796 - 8	DIN 6796 - 8	DIN 6796 - 8	2	
362	010003 – 362	ISO 4762 - M8x45	ISO 4762 - M8x45	ISO 4762 - M8x45	2	
363	**010003 – 363**	**Zylinderbolzen**	**Cylinder pin**	**Boulon de cylindre**	**1**	
364	010003 – 364	DIN 6799 - 4	DIN 6799 - 4	DIN 6799 - 4	1	
365	010003 – 365	DIN 6796 - 8	DIN 6796 - 8	DIN 6796 - 8	1	
366	010003 – 366	ISO 4032 - M8	ISO 4032 - M8	ISO 4032 - M8	1	
367	010003 – 367	Rundzylinder DSEU 2540 P-A	Round cylinder DSEU 2540 P-A	Cylindre à air comprimé DSEU 240 P-A	1	
368	010003 – 368	Gelenkkopf SGS-M10x1,25	Articulated head SGS-M10x1,25	Tête d'articulation SGS-M10x1,25	1	
369	010003 – 369	Näherungsschalter	Proximity switch	Détecteur de proximité	1	
370	010003 – 370	Befestigungsbausatz SMBR-25	Fastening kit SMBR-25	Jeu de pièces de fixation - SMBR-25	1	
371	010003 – 371	Steckdose E11486	Socket E11486	Prise femelle E11486	1	
372	010003 – 372	Mutter - B-M10	Nut - B-M10	Écrou - B-M10	1	
373	010003 – 373	DIN 6796 - 10	DIN 6796 - 10	DIN 6796 - 10	1	
374	010003 – 374	ISO 4762 - M10x35	ISO 4762 - M10x35	ISO 4762 - M10x35	1	
375	**010003 – 375**	**Zwischenstück**	**Separator**	**Raccord**	**1**	
376	010003 – 376	ISO 4762 - M3x40	ISO 4762 - M3x40	ISO 4762 - M3x40	2	
377	010003 – 377	Sicherungsscheibe S3	Thrust washer S3	Rondele d'arrêt S3	2	
378	010003 – 378	Schalter	Switch	Interrupteur	2	
379	010003 – 379	Kabeldose	Kabeldose	Cable box	2	
380	**010003 – 380**	**Klappenhalter**	**Flap holder**	**Clapet d'arrêt**	**1**	
381	010003 – 381	DIN 6796 - 6	DIN 6796 - 6	DIN 6796 - 6	2	
382	010003 – 382	ISO 4762 - M6x30	ISO 4762 - M6x30	ISO 4762 - M6x30	2	
383	**010003 – 383**	**Kanalklappe, rechts**	**Duct flap, right**	**Valvule du canal, droit**	**1**	**V**
384	**010003 – 384**	**Kanalklappe, links**	**Duct flap, left**	**Valvule du canal, gauchet**	**1**	**V**
385	**010003 – 385**	**Federschraube**	**Spring bolt**	**Vis à resort**	**4**	**V**
386	010003 – 386	Kegelfeder	Conical spring	Plume de cône	4	V
387	**010003 – 387**	**Verbindungslasche**	**Connecting stratch**	**Raccorde**	**1**	
388	010003 – 388	ISO 4762 - M8x35	ISO 4762 - M8x35	ISO 4762 - M8x35	1	
389	010003 – 389	ISO 4762 - M8x16	ISO 4762 - M8x16	ISO 4762 - M8x16	2	
390	010003 – 390	Sicherungsscheibe S8	Thrust washer S8	Rondelle d'arrêt S8	4	
391	**010003 – 391**	**Führungsleiste**	**Guiding strip**	**Rail de guidage**	**2**	
392	010003 – 392	ISO 4762 - M6x12	ISO 4762 - M6x12	ISO 4762 - M6x12	4	

V = Verschleißteile ; Wearing parts ; Pièces de rechange
R = Austauschteile ; Replacement parts ; Pièces d'échange
B = bei Bedarf ; If necessary ; Au besoin
O = Option ; Option ; Option

Pos.	Bestell-Nr. Order code N° cde	Benennung	Description	Dénomination	St. Pcs. Pc.	
393	010003 – 393	DIN 6796 - 6	DIN 6796 - 6	DIN 6796 - 6	4	
394	010003 – 394	ISO 8736 - 6m6x12	ISO 8736 - 6m6x12	ISO 8736 - 6m6x12	4	
395	**010003 – 395**	**Deckplatte, rechts**	**Cover plate, right**	**Plaque de couverture droite**	**1**	
396	010003 – 396	ISO 4762 - M8x12	ISO 4762 - M8x12	ISO 4762 - M8x12	4	
397	010003 – 397	Sicherungsscheibe S8	Thrust washer S8	Rondelle d'arrêt S8	4	
398	010003 – 398	ISO 8734 - 8m6x20	ISO 8734 - 8m6x20	ISO 8734 - 8m6x20	4	
399	010003 – 399	Nadelhülse DL2516	Needle sleeve DL2516	Douille d'aguille DL2516	1	
400	**010003 – 400**	**Seitenplatte, rechts**	**Side plate, right**	**Plaque latérale**	**1**	
401	**010003 – 401**	**Seitenplatte, links**	**Side plate, left**	**Plaque latérale**	**1**	
407	**010003 – 407**	**Deckplatte, links**	**Cover plate, left**	**Plaque de couvertre**	**1**	
408	010003 – 408	ISO 4762 - M8x12	ISO 4762 - M8x12	ISO 4762 - M8x12	4	
409	010003 – 409	Sicherungsscheibe S8	Thrust washer S8	Rondelle d'arrêt S8	4	
410	010003 – 410	ISO 8734 - 8m6x20	ISO 8734 - 8m6x20	ISO 8734 - 8m6x20	4	
411	010003 – 411	Nadelhülse DL2516	Needle sleeve DL2516	Douille d'aguille DL2516	1	
412	**010003 – 412**	**Deckel**	**Cover**	**Couvercle**	**1**	
413	010003 – 413	ISO 4762 - M5x8	ISO 4762 - M5x8	ISO 4762 - M5x8	1	
414	**010003 – 414**	**Bandführung**	**Strap guidance**	**Guide du feuillard**	**1**	
415	010003 – 415	ISO 4762 - M6x16	ISO 4762 - M6x16	ISO 4762 - M6x16	2	
416	010003 – 416	DIN 6796 - 6	DIN 6796 - 6	DIN 6796 - 6	2	
417	**010003 – 417**	**Bolzen**	**Stud**	**Boulon**	**3**	
418	**010003 – 418**	**Distanzbüchse**	**Bistance bushing**	**Douille d'écartement**	**2**	
419	**010003 – 419**	**Passfeder**	**Feather key**	**Ressort d'ajustage**	**1**	
420	010003 – 420	DIN 913 - M5x8	DIN 913 - M5x8	DIN 913 - M5x8	2	
421	010003 – 421	ISO 4762 - M6x30	ISO 4762 - M6x30	ISO 4762 - M6x30	2	V
422	010003 – 422	Sicherungsscheibe S6	Thrust washer S6	Rondelle d'arrêt S6	2	V
423	010003 – 423	ISO 8734 - 6m6x16	ISO 8734 - 6m6x16	ISO 8734 - 6m6x16	2	
424	010003 – 424	Drosselventil GRLA-1/8-QS-6	Double check valve GRLA-1/8-QS-6	Soupape d'éntranglement GRLA-1/8-QS-6	2	
425	010003 – 425	DIN 6796 - 8	DIN 6796 - 8	DIN 6796 - 8	3	
428	010003 – 428	ISO 8734 - 4m6x6	ISO 8734 - 4m6x6	ISO 8734 - 4m6x6	4	
429	**010003 – 429**	**Distanzstück**	**Spacer**	**Douille d'écartement**	**2**	
430	**010003 – 430**	**Knebelhalter**	**Toggle holder**	**Support de bâillon**	**1**	
431	010003 – 431	ISO 8734 10m6x32	ISO 8734 10m6x32	ISO 8734 10m6x32	2	
432	010003 – 432	ISO 8734 0m6x20	ISO 8734 10m6x20	ISO 8734 10m6x20	2	
433	**010003 – 433**	**Knebelarm**	**Toggel arm**	**Bras de baîlon**	**2**	
434	**010003 – 434**	**Bolzen**	**Stud**	**Boulon**	**1**	

V = Verschleißteile ; Wearing parts ; Pièces de rechange
R = Austauschteile ; Replacement parts ; Pièces d'échange
B = bei Bedarf ; If necessary ; Au besoin
O = Option ; Option ; Option

Pos.	Bestell-Nr. Order code N° cde	Benennung	Description	Dénomination	St. Pcs. Pc.	
435	010003 – 435	Untermesser, rechts	Lower cutter, right	Couteau inférieur, à droite	2	
436	010003 – 436	Untermesser, links	Lower cutter, left	Couteau inférieur, à gauche	1	
437	010003 – 437	Bolzen	Stud	Boulon	1	
438	010003 – 438	Obermesser, links	Upper cutter, left	Couteau supérieur à gauche	1	
439	010003 – 439	Druckfeder	Pressure spring	Ressort à pression	1	V
440	010003 - 440	Obermesser, rechts	Upper cutter, right	Couteau supérieur à droite	1	V
441	010003 - 441	Stützbalken	Supporting bar	Barre de sécurité	1	
442	010003 - 442	Schnittplatte, rechts	Clipping bed, reight	Plaque de coupe	1	
443	010003 - 443	Abschneidmesser	Cutter	Matrice de découpage	1	V
444	010003 – 444	Haltebolzen	Holding stud	Boulon d'arrêt	1	
445	010003 – 445	Klemmmesser, links	Clamping cutter, left	Couteau de gripper, à gauche	1	V
446	010003 – 446	Klemmmesser, rechts	Clamping cutter, right	Couteau de gripper, à droite	1	V
447	010003 – 447	Bolzen	Stud	Boulon	2	
448	010003 – 448	Führung	Guidance	Guide	1	
449	010003 – 449	ISO 4762 - M6x12	ISO 4762 - M6x12	ISO 4762 - M6x12	1	
450	010003 – 450	Sicherungsscheibe - S6	Safety disc - S6	Rondelle d'arrêt - S6	2	
451	010003 – 451	Distanzstück	Distance piece	Pièce d'écartement	2	
452	010003 – 452	Distanzstück	Distance piece	Pièce d'écartement	1	
453	010003 – 453	Schnittplatte, mitte	Cutting plate, middle	Plaque de couteau, au milieu	2	V
454	010003 – 454	ISO 4762 - M6x16	ISO 4762 - M6x16	ISO 4762 - M6x16	1	
455	010003 – 455	Schnittplatte, links	Cutting plate, left	Plaque de couteau, à gauche	2	
456	010003 – 456	ISO 4762 - M5x60	ISO 4762 - M5x60	ISO 4762 - M5x60	1	
457	010003 – 457	Obermesserstift	Upper cutter pin	Goupille de couteau supérieur	1	V
458	010003 – 458	Gegenmesser	Counter cutter	Contre-couteau	2	
459	010003 – 459	Lasche	Connecting link	Éclisse	2	
460	010003 – 460	Bolzen	Bolt	Boulon	2	
461	010003 – 461	Rolle	Roller	Bobine	2	
462	010003 – 462	DIN 8752 - 2x14	DIN 8752 - 2x14	DIN 8752 - 2x14	1	
463	010003 – 463	Schieber	Slider	Coulisseau	2	
464	010003 – 464	DIN 8752 - 6x14	DIN 8752 - 6x14	DIN 8752 - 6x14	2	
465	010003 – 465	ISO 4762 - M3x16	ISO 4762 - M3x16	ISO 4762 - M3x16	2	
466	010003 – 466	DIN 6796 - 3	DIN 6796 - 3	DIN 6796 - 3	2	
467	010003 – 467	ISO 4762 - M4x16	ISO 4762 - M4x16	ISO 4762 - M4x16	2	
468	010003 - 498	DIN 6796 - 4	DIN 6796 - 4	DIN 6796 - 4	2	
503	010003 – 503	Seitenwand komplett	Side wall, complete	Face latérale, complet	1	

V = Verschleißteile ; Wearing parts ; Pièces de rechange
R = Austauschteile ; Replacement parts ; Pièces d'échange
B = bei Bedarf ; If necessary ; Au besoin
O = Option ; Option ; Option

Pos.	Bestell-Nr. Order code N° cde	Benennung	Description	Dénomination	St. Pcs. Pc.	
504	010003 – 504	Klemmkasten-winkel	Terminal box angle	D'angle de boîte de serrage	1	
506	010003 – 506	Zählscheibe komplett	Countig disk compl.	Disque de comptage complet	1	
513	010003 – 513	Kopfabaschaltung	Head deactivation	Arrêt de la tête	1	
514	010003 – 514	Stößel, komplett	Slide, complete	Pilon, comlet	1	
518	010003 – 518	Klemmkastenblech, komplett	Terminal box plate, complete	Plaque de boîte de serrage, complet	1	
520	010003 – 520	Multi Funktionsblock	Multi-functional block	Bloc multifonctionnel	1	
521	010003 - 521	Richtvorrichtung komplett 16 / 19mm	Straightening unit complete 5/8" / 3/4"	Unité de dressage compl. 16 / 19mm	1	
523	010003 - 523	Richtvorrichtung komplett 13mm	Straightening unit complete 1/2"	Unité de dressage compl. 13mm	1	
530	010003 – 530	Messerpaket 19mm komplet	Cutter package 19mm complete	Kit de couteaux 19mm	1	V
531	010003 – 531	Messerpaket 16mm komplet	Cutter package 16mm complete	Kit de couteaux 16mm	1	V
532	010003 – 532	Messerpaket 13mm komplet	Cutter package 13mm complete	Kit de couteaux 13mm	1	V
533	010003 – 533	Messerpaket 19mm komplet	Cutter package 19mm complete	Kit de couteaux 19mm	1	R
534	010003 – 534	Messerpaket 16mm komplet	Cutter package 16mm complete	Kit de couteaux 16mm	1	R
535	010003 – 535	Messerpaket 13mm komplet	Cutter package 13mm complete	Kit de couteaux 13mm	1	R
617	010003 – 617	L-Steckverschraubung QSLV-3/8-12	L connecting screwing QSLV-3/8-12	Boulonnage de L-connect. QSLV-3/8-12	1	
618	010003 – 618	Schnellkupplung mit Gew. LP-012-0-L1522 M22x1,5	Accouplement avec filet LP-012-0-L1522 M22x1,5	Quick-acting coupling incl. thread LP-012-0-L1522 M22x1,5	1	
619	010003 – 619	Schnellkupplung mit Tülle LP-012-0-SLO16	Quick-acting coupling incl. bushing LP-012-0-SLO16	Accouplement avec bec LP-012-0-SLO16	1	O
620	010003 – 620	Hohlschraube	Banjo bolt	Boulon à filet femelle	1	
623	010003 – 623	Dichtring O-3/8	Selaing ring O-3/8	Bague d'étanchéité O-3/8	4	
625	010003 – 625	L-Steckverschraubung QSLV-3/8-12-L	L connecting screwing QSLV-3/8-12-L	Boulonnage de L-connect. QSLV-3/8-12-L	3	
626	010003 – 626	Schlauch 12x2/600 lang	Hose 12x2/600 long	Tuyau 12x2/600 long	1	
627	010003 – 627	Schlauch 12x2/250 lang	Hose 12x2/250 long	Tuyau 12x2/250 long	2	

V = Verschleißteile ; Wearing parts ; Pièces de rechange
R = Austauschteile ; Replacement parts ; Pièces d'échange
B = bei Bedarf ; If necessary ; Au besoin
O = Option ; Option ; Option

Pos.	Bestell-Nr. Order code N° cde	Benennung	Description	Dénomination	St. Pcs. Pc.
629	010003 – 629	L-Steckverschraubung QSL-1/8-8	L connecting screwing QSL-1/8-8	Boulonnage de L-connect. QSL-1/8-8	1
630	010003 – 630	L-Steckverschraubung QSLL-1/8-8	L connecting screwing QSLL-1/8-8	Boulonnage de L-connect. QSLL-1/8-8	1
633	**010003 – 633**	**Schlauch 8x1,25/350 lang**	**Hose 8x1,25/350 long**	**Tuyau 8x1,25/350 long**	**2**
634	**010003 – 634**	**5/3 Ventil m. Grundplatte**	**5/3 valve with plate**	**5/3 Distributeur**	**1**
636	010003 – 636	Leitungsdose mit Leuchte	Line socket incl. lamp	Boîte de conduit av. luminaire	2
638	010003 – 638	Hohlschraube VT-3/8-2	Banjo bolt VT-3/8-2	Boulon à filet femelle VT-3/8-2	3
639	010003 – 639	Dichtring O-3/8	Selaing ring O-3/8	Bague d'étanchéité O-3/8	6
641	010003 – 641	Dichtring O-1/8	Selaing ring O-1/8	Bague d'étanchéité O-1/8	2
642	010003 – 642	Blindstopfen B1/8"	Blind plug B1/8"	Bouchon morte B1/8"	2
643	010003 – 643	Steckverschraubung QS-1/8-8	Plug-in screwing QS-1/8 -8	Boulonnage QS-1/8-8	1
644	010003 – 644	Blindstopfen B3/8"	Blind plug B3/8"	Bouchon morte B3/8"	2
645	010003 – 645	Schalldämpfer 1/2"	Muffler 1/2"	Silencieux 1/2"	1
646	010003 – 646	Hohlschraube 1/8-2-PK3	Banjo bolt 1/8-2-PK3	Boulon à filet femelle 1/8-2-PK3	4
647	010003 – 647	3/2 Wegeventil CPE14-M1BH-3GL	3/2-way distri. control valve CPE14-M1BH-3GL	3/2 Distributeur CPE14-M1BH-3GL	1
648	010003 – 648	3/2 Wegeventil CPE14-M1BH-3GL	3/2-way distri. control valve CPE14-M1BH-3GL	3/2 Distributeur CPE14-M1BH-3GL	1
649	010003 – 649	Steckdose mit PVC Kabel	Socket with PVC cable	Prise femelle avec câble de PVC	2
650	010003 – 650	Aufsatz Handbetätigung AHB-MZB	Adapter manual actuation AHB-MZB	Ensemble Service manuel AHB-MZB	2
651	010003 – 651	Dichtring O-1/8	Selaing ring O-1/8	Bague d'étanchéité O-1/8	12
652	010003 - 652	Schalldämpfer SD 1/8 F	Muffler SD 1/8 F	Silencieux SD 1/8 F	1
653	010003 – 653	2/2 Wege Magnetventil MN1H-2-3/8-MS	2/2-way distri. control valve MN1H-2-3/8-MS	2/2 Distributeur MN1H-2-3/8-MS	2

V = Verschleißteile ; Wearing parts ; Pièces de rechange
R = Austauschteile ; Replacement parts ; Pièces d'échange
B = bei Bedarf ; If necessary ; Au besoin
O = Option ; Option ; Option

Pos.	Bestell-Nr. Order code N° cde	Benennung	Description	Dénomination	St. Pcs. Pc.	
654	010003 – 654	Magnetspule MSN1G-24	Magnet coil MSN1G-24	Bobine d'excitation MSN1G-24	2	
655	010003 – 655	Leitungsdose mit Leuchte	Line socket incl. lamp	Boîte de conduit av. luminaire	2	
657	**010003 – 657**	**Schlauch 8x1,25/450 lang**	**Hose 8x1,25/450 long**	**Tuyau 8x1,25/450 long**	**1**	
658	**010003 – 658**	**3/2 Wegeventil CPE14-M1BH-3GL**	**3/2-way distri. control valve CPE14-M1BH-3GL**	**3/2 Distributeur CPE14-M1BH-3GL**	**1**	
659	**010003 – 659**	**Steckdose mit PVC Kabel**	**Socket with PVC cable**	**Prise femelle avec câble de PVC**	**1**	
665	**010003 – 665**	**Druckregelventil LRMA-1/4-QS**	**Pressure control valve LRMA-1/4-QS**	**Vanne régulative de pression LRMA-1/4-QS**	**1**	
666	**010003 – 666**	**Steckverschrau-bung QSLV-1/8-6**	**Plug-in screwing QSLV-1/8-6**	**Boulonnage QSLV-1/8-6**	**1**	
667	**010003 – 667**	**Schlauch 6x1/850 lang**	**Hose 6x1/850 long**	**Tuyau 6x1/850 long**	**2**	
670	010003 – 670	L-Steckverschraubung QSL-1/8-8	L connecting screwing QSL-1/8-8	Boulonnage de L-connect. QSL-1/8-8	2	
675	010003 – 675	Hohlschraube VT-3/8-2	Banjo bolt VT-3/8-2	Boulon à filet femelle VT-3/8-2	1	
676	**010003 – 676**	**Ventilblock**	**Valve block**	**Carcasse de douille**	**1**	
677	010003 – 677	DIN 8752 - 8x30	DIN 8752 - 8x30	DIN 8752 - 8x30	4	
678	010003 – 678	Rahmen für Einsatz Stift	Frame for insert pin	Cadre pour utilisation goupille	1	
679	010003 – 679	Rahmen für Einsatz Buchse	Frame for insert bushing	Cadre pour utilisation boîte	1	
689	**010003 – 689**	**Hutschiene**	**Top hat rail**	**Profilé chapeau**	**1**	
695	010003 – 695	Abteilungstrennplatte	Compart. separating plate	Plaque de séparât. de division	1	
696	010003 – 696	DIN 6796 -6	DIN 6796 -6	DIN 6796 -6	4	
700	010003 – 700	Schildträger	Plate carrier	Porteur de plaque	2	
701	010003 – 701	Drucktaster flach	Pushbutton flat	Capteur de pression, plat	2	
703	**010003 – 703**	**Lochblendstopfen 1**	**Aperture plug 1**	**Raccord fileté 1**	**3**	

V = Verschleißteile ; Wearing parts ; Pièces de rechange
R = Austauschteile ; Replacement parts ; Pièces d'échange
B = bei Bedarf ; If necessary ; Au besoin
O = Option ; Option ; Option

Pos.	Bestell-Nr. Order code N° cde	Benennung	Description	Dénomination	St. Pcs. Pc.	
704	**010003 – 704**	**Lochblendstopfen 2**	**Aperture plug 2**	**Raccord fileté 2**	**1**	
720	**010003 – 720**	**Stößelführung**	**Slide guidance**	**Guide de poussoir de soupape**	**1**	
721	010003 – 721	ISO 8750 - 6x22	ISO 8750 - 6x22	ISO 8750 - 6x22	2	
722	010003 – 722	ISO 8750 - 3x16	ISO 8750 - 3x16	ISO 8750 - 3x16	4	
723	010003 – 723	Schalter	Switch	Interrupteur	2	
724	010003 – 724	Kabeldose	Cable box	Boîte de câbles	2	
726	010003 – 726	Druckfeder	Pressure spring	Ressort à pression	1	
727	**010003 – 727**	**Scheibe**	**Disk**	**Plaque**	**1**	
728	010003 – 728	ISO 10642 - M6x12	ISO 10642 - M6x12	ISO 10642 - M6x12	1	
729	**010003 – 729**	**Platte**	**Plate**	**Plaque**	**1**	
730	010003 – 730	ISO 4762 - M8x45	ISO 4762 - M8x45	ISO 4762 - M8x45	2	
731	010003 – 731	Sicherungsscheibe S8	Thrust washer S8	Rondelle d'arrêt S8	2	
740	010003 – 740	Tüllengehäuse	Bushing housing	Carcasse de douille	1	
741	010003 – 741	Anbaugehäuse	Attached housing	Carcasse monté en ajouté	1	
742	010003 – 742	ISO 4762 - M4x12	ISO 4762 - M4x12	ISO 4762 - M4x12	4	
743	010003 – 743	Sicherungsscheibe S4	Thrust washer S4	Rondelle d'arrêt S4	4	
744	010003 – 744	ISO 4032 - M4	ISO 4032 - M4	ISO 4032 - M4	4	
745	010003 – 745	SKINTOP Verschraubung	SKINTOP screwing	SKINTOP Boulonnage	6	
746	010003 – 746	SKINDICHT Gegenmutter	SKINDICHT counternut	SKINDICHT Contreécrou	6	
747	010003 – 747	SKINTOP Verschraubung	SKINTOP screwing	SKINTOP Boulonnage	4	
748	010003 – 748	SKINDICHT Gegenmutter	SKINDICHT counternut	SKINDICHT Contreécrou	4	
749	010003 – 749	SKINTOP Mehrfachdichteins.	SKINTOP multi. sealing insert	SKINTOP Multiple très insert	3	
754	010003 – 754	SKINTOP Verschraubung	SKINTOP screwing	SKINTOP Boulonnage	1	
760	010003 – 760	ISO 4762 - M5x10	ISO 4762 - M5x10	ISO 4762 - M5x10	2	
762	010003 – 762	Einlegebrücke rot	Insert bridge red	Insérer pont rouge	1	
763	010003 – 763	Einlegebrücke blau	Insert bridge blue	Insérer pont bleu	1	
764	010003 – 764	Einlegebrücke blau	Insert bridge blue	Insérer pont bleu	1	
775	010003 – 775	Klebeschild Blitzpfeil-Dreieck	Sticker flash symbol triangle	Plaque éclair-triangle	1	
879	**010003 – 879**	**Schaltfinger**	**Schaltfinger**	**Contorl finger**	**2**	

V = Verschleißteile ; Wearing parts ; Pièces de rechange
R = Austauschteile ; Replacement parts ; Pièces d'échange
B = bei Bedarf ; If necessary ; Au besoin
O = Option ; Option ; Option

Pos.	Bestell-Nr. Order code N° cde	Benennung	Description	Dénomination	St. Pcs. Pc.	
905	**010003 - 905**	**Kanalrücken, vorn**	**Kanalrücken, vorn**	**Channel back, front**	**1**	
906	**010003 - 906**	**Kanalklappe rechts vorn**	**Kanalklappe, rechts vorn**	**Channel flap, front right**	**1**	
907	**010003 - 907**	**Kanalklappe links**	**Kanalklappe, links**	**Channel flap, left**	**1**	
980	010003 – 980	Dichtring A 14x20	Sealing ring A 14x20	Bague d'étanchéité A 14x20	1	
981	010003 – 981	Dichtring 27x21x2	Sealing ring 27x21x2	Bague d'étanchéité 27x21x2	1	
1002	**010003 – 1002**	**Klemmenkasten, kompl.**	**Terminal box, complete**	**Boîte de bornes, complet**	**1**	
1007	010003 – 1007	Modul Einsatz Stift	Module insert pin	Module insertion goupille	7	
1008	010003 – 1008	Modul Einsatz Buchse	Module insert bushing	Module utilisation boîte	7	
1009	010003 – 1009	ISO 4762 - M6x12	ISO 4762 - M6x12	ISO 4762 - M6x12	4	
1010	010003 – 1010	Merfachdichteinsatz	Multiple sealing insert	SKINTOP Multiple très insert	1	
1011	010003 – 1011	Dreistock Initiatorenklemme	Dreistock switch clamp	Triple borne de connexion	29	
1014	010003 – 1014	Isolator	Insulator	Isolant	4	
1015	010003 – 1015	DIN 913 - M6x20	DIN 913 - M6x20	DIN 913 - M6x20	4	
1017	010003 – 1017	Endhalter f. Trageschiene	End holder for carrier rail	Cadre support final	2	
1018	010003 – 1018	Einlegebrücke weiß	Insertion bridge white	Insérer pont blanc	1	
1020	010003 – 1020	Crimpkontakt Buchse	Crimp contact bushing	Contact d'sertissage boîte	10	
1022	010003 – 1022	Crimpkontakt Stift	Crimp contact pin	Contact d'sertissage goupille	10	
1027	010003 – 1027	SKINDICHT Blindstopfen	SKINDICHT blind plug	SKIND. plot de remplissage	2	
1028	010003 – 1028	SKINDICHT Gegenmutter	SKINDICHT counternut	SKINDICHT Contreécrou	2	
1030	010003 – 1030	Schild „BAND EINLEGEN“	Sign “INSERT STRAP“	Plaque „INSERER FEUILLARD“	1	
1031	010003 – 1031	Schild „VERSCHLUSS“	Sign “SEAL“	Plaque „FERMETURE“	1	

V = Verschleißteile ; Wearing parts ; Pièces de rechange
R = Austauschteile ; Replacement parts ; Pièces d'échange
B = bei Bedarf ; If necessary ; Au besoin
O = Option ; Option ; Option

Pos.	Bestell-Nr. Order code N° cde	Benennung	Description	Dénomination	St. Pcs. Pc.	
1041	010003 – 1041	Klemmführung 19mm	Clamp guidance 19mm	Guidage de serrage 19mm	1	V
1042	010003 – 1042	Klemmführung 16mm	Clamp guidance 16mm	Guidage de serrage 16mm	1	V
1043	010003 – 1043	Klemmführung 13mm	Clamp guidance 13mm	Guidage de serrage 13mm	1	V
1052	010003 – 1052	Untermesser, rechts 16mm	Lower cutter, right 16mm	Couteau inférieur 16mm	1	V
1053	010003 – 1053	Untermesser, rechts 13mm	Lower cutter, right 13mm	Couteau inférieur 13mm	1	V
1062	010003 – 1062	Untermesser, links 16mm	Lower cutter, left 16mm	Couteau inférieur 16mm	1	V
1063	010003 – 1063	Untermesser, links 13mm	Lower cutter, left 13mm	Couteau inférieur 13mm	1	V
1072	010003 – 1072	Blockobermesser 16mm	Block upper cutter 16mm	Poinçon supérieur 16mm	1	V
1073	010003 – 1073	Blockobermesser 13mm	Block upper cutter 13mm	Poinçon supérieur 13mm	1	V
1082	010003 – 1082	Messersträger 16mm	Cutter carrier 16mm	Porte couteau 16mm	1	V
1083	010003 – 1083	Messersträger 13mm	Cutter carrier 13mm	Porte couteau 13mm	1	V
1092	010003 – 1092	Klemmesser, links 16mm	Clamping cutter, left 16mm	Couteau de maitien 16mm	1	V
1093	010003 – 1093	Klemmesser, links 13mm	Clamping cutter, left 13mm	Couteau de maitien 13mm	1	V
1102	010003 – 1102	Klemmesser, rechts 16mm	Clamping cutter, right 16mm	Couteau de maitien 16mm	1	V
1103	010003 – 1103	Klemmesser, rechts 13mm	Clamping cutter, right 13mm	Couteau de maitien 13mm	1	V
1112	010003 – 1112	Schnittplatte, mitte 16mm	Clipping bed, middle 16mm	Plaque de coupe 16mm	1	V
1113	010003 – 1113	Schnittplatte, mitte 13mm	Clipping bed, middle 13mm	Plaque de coupe 13mm	1	V
1122	010003 – 1122	Schnittplatte, links 16mm	Clipping bed, left 16mm	Plaque de coupe 16mm	1	V
1123	010003 – 1123	Schnittplatte, links 13mm	Clipping bed, left 13mm	Plaque de coupe 13mm	1	V
1130	010003 - 1130	Grundplatte	Base plate	Plaque de montage	1	

V = Verschleißteile ; Wearing parts ; Pièces de rechange
R = Austauschteile ; Replacement parts ; Pièces d'échange
B = bei Bedarf ; If necessary ; Au besoin
O = Option ; Option ; Option

Pos.	Bestell-Nr. Order code N° cde	Benennung	Description	Dénomination	St. Pcs. Pc.	
1131	**010003 – 1131**	**Befestigungsplatte**	**Fastening Plate**	**Plaque de fixation**	**1**	
1132	**010003 - 1132**	**Spindel**	**Spindle**	**Fuseau**	**1**	
1133	010003 - 1133	DIN 6799 - 12	DIN 6799 - 12	DIN 6799 - 12	1	
1134	**010003 - 1134**	**Spindelführung**	**Spindlefence**	**Guidage du fuseau**	**1**	
1135	010003 - 1135	ISO 4762 - M8 x 25	ISO 4762 - M8 x 25	ISO 4762 - M8 x 25	2	
1136	010003 - 1136	Sicherungsscheibe S8	Thrust washer S8	Rondelle d'arrêt S8	2	
1137	**010003 - 1137**	**Spindellager**	**Spindlebearing**	**Palier du fuseau**	**1**	
1138	010003 - 1138	ISO 4762 - M8 x 20	ISO 4762 - M8 x 20	ISO 4762 - M8 x 20	2	
1139	010003 - 1139	Sicherungsscheibe S8	Thrust washer S8	Rondelle d'arrêt S8	2	
1140	010003 - 1140	ISO 8734 5m6 x 20	ISO 8734 5m6 x 20	ISO 8734 5m6 x 20	2	
1141	**010003 - 1141**	**Spannmutter**	**Tensioningnut**	**L'écrou de serrage**	**1**	
1143	010003 - 1143	Druckfeder	Pressure Spring	Ressort à pression	1	
1144	**010003 - 1144**	**Dämpferhalter**	**Absorberholder**	**Cadre support du amortisseur**	**1**	
1145	010003 - 1145	Stoßdämpfer	Absorber	Amortisseur	2	
1146	**010003 - 1146**	**Distanzhülse**	**Spacer sleeve**	**Douille d'écartement**	**1**	
2015	**010003 - 2015**	**Lichtschranken-halter**	**Light barrier holder**	**Cadre support de cellule photo**	**1**	
2016	010003 - 2016	**Lichtschranke**	Light barrier	Cellule photo	1	
2017	010003 - 2017	**ISO 4762 - M3x16**	**ISO 4762 - M3x16**	**ISO 4762 - M3x16**	2	
2018	010003 - 2018	Sicherungsscheibe S3	Thrust washer S3	Rondelle d'arrêt S3	2	
2020	010003 - 2020	Sicherungsscheibe S5	Thrust washer S5	Rondelle d'arrêt S5	2	
2021	010003 - 2021	ISO 4762 - M5x45	ISO 4762 - M5x45	ISO 4762 - M5x45	2	
2023	010003 - 2023	Axialnadelkranz AXK 2542	Axial bearing AXK 2542	Roulement axial AXK2542	1	
2032	**010003 - 2032**	**Distanzrohr 5**	**Distance sleeve 5**	**Entretoise d'écartement 5**	**6**	
2033	010003 - 2033	Nutenstein M6	Sliding block M6	Coulisseau à rainure M6	2	
2034	010003 - 2034	ISO 8734 12m6x30	ISO 8734 12m6x30	ISO 8734 12m6x30	1	
2035	010003 - 2035	ISO 4762 - M6x25	ISO 4762 - M6x25	ISO 4762 - M6x25	1	
2038	010003 - 2038	Führungsleiste	Guidance bar	Rail de guidage	1	
2039	010003 - 2039	DIN 988 - 6x12x1	DIN 988 - 6x12x1	DIN 988 - 6x12x1	8	
2040	**010003 - 2040**	**Bandführung Oberteil**	**Strap guidance upper part**	**Guide de feuillard en haut**	**1**	
2041	010003 - 2041	ISO 7090 – 3,2	ISO 7090 – 3,2	ISO 7090 – 3,2	8	

V = Verschleißteile ; Wearing parts ; Pièces de rechange
R = Austauschteile ; Replacement parts ; Pièces d'échange
B = bei Bedarf ; If necessary ; Au besoin
O = Option ; Option ; Option

Pos.	Bestell-Nr. Order code N° cde	Benennung	Description	Dénomination	St. Pcs. Pc.	
2042	010003 - 2042	Rillenkugellager 623-2Z	Bearing 623-2Z	Palier à billes 623-2Z	4	
2043	**010003 - 2043**	**Bandführung Transport**	**Strap guidance transport**	**Guide de feuillard roulage**	**1**	
2044	010003 - 2044	Sicherungsscheibe S3	Thrust washer S3	Rondelle d'arrêt S3	4	
2045	010003 - 2045	ISO 4762 - M3x12	ISO 4762 - M3x12	ISO 4762 - M3x12	4	
2046	010003 - 2046	ISO 4762 - M5x40	ISO 4762 - M5x40	ISO 4762 - M5x40	1	
2047	010003 - 2047	Sicherungsscheibe S5	Thrust washer S5	Rondelle d'arrêt S4	1	
2048	**010003 - 2048**	**Bandführung**	**Strap guidance**	**Guide de feuillard**	**1**	
2049	010003 - 2049	ISO 7379 - 8-M6x30	ISO 7379 - 8-M6x30	ISO 7379 - 8-M6x30	2	
2063	010003 - 2063	Druckfeder	Pressure Spring	Ressort à pression	2	
2068	010003 - 2068	DIN 988 - 6x12x0,5	DIN 988 - 6x12x0,5	DIN 988 - 6x12x0,5	6	

V = Verschleißteile ; Wearing parts ; Pièces de rechange
R = Austauschteile ; Replacement parts ; Pièces d'échange
B = bei Bedarf ; If necessary ; Au besoin
O = Option ; Option ; Option

4. Bestellformular / Order Form / Formulaire de commande

TITAN Umreifungstechnik GmbH & Co. KG
Ersatzteilservice / Spare parts service / Service des pièces de rechange
Berliner Str. 51 – 55
58332 Schwelm / Germany

FAX: +49 (2336) 808-208

Pos.	Bestell-Nr. Order No. N° de commande	Benennung	Description	Dénomination	Stück QTE. Pièce
1	020012-1	Nockenwerkmotor			1
⇑ Beispiel ⇑ / ⇑ Example ⇑ / ⇑ Exemple ⇑					

Bitte entsprechende Bandbreite ankreuzen. Please mark the required strap width. Veuillez cocher la largeur de feuillard adéquate.		
13 mm ☐	16 mm ☐	19 mm ☐
Bitte entsprechende Banddicke ankreuzen. Please mark the required strap thickness. Veuillez cocher la largeur de epaisseur du feuillard.		
0,5mm ☐	0,63mm ☐	

Firma / Company / Société	
Kontaktperson / Contact person / Personne de contact	
Straße / Street / Rue	
PLZ, Ort / Zip code, place / Code postal, ville	
Telefon / Phone / Téléphone	
Fax, E-Mail	

Datum, Date, Date Unterschrift, Signature, Signature

Das TITAN Gesamtprogramm	The TITAN range of products	La gamme de produits TITAN
Umreifungsgeräte für Stahl- und Kunststoffband	**Strapping tools** for steel and plastic strap	**Appareils de cerclage** pour feuillard d'acier et plastique
Umreifungsmaschinen und Aggregate für Stahl- und Kunststoffband	**Strapping machines and aggregates** for steel and plastic strap	**Machines et têtes de cerclage** Pour feuillard d'acier et plastique
Ballenumreifungssysteme für Stahl- und Kunststoffband	**Baling systems** for steel and plastic strap	**Systèmes de cerclage de balles** Pour feuillard d'acier et plastique
Crimpsysteme	**Crimp systems**	**Systèmes crimp**
Stanzverbinder	**Strip joining devices**	**Système d'agrafage de bobines**
Verpackungsband aus Stahl- und Kunststoffband	**Strapping** Steel and plastic strap	**Feuillard d'emballage** Acier et plastique
Verschlusshülsen	**Seals**	**Chapes**
Zubehör	**Accessories**	**Accessoires**
		TITAN Umreifungstechnik GmbH & Co. KG Postfach 440, 58317 Schwelm Berliner Straße 51-55, 58332 Schwelm Telefon: +49 (0) 23 36 / 8 08-0 Telefax: +49 (0) 23 36 / 8 08-208 E-Mail: info@titan-schwelm.de www.titan-schwelm.de **Technische Änderungen vorbehalten** **Subject to technical alterations** **Sous réserve de modifications techniques**

Operating Instructions

ABS

702 0002

Bandzuführsystem
für Stahlband

Combined uncoiling and
strap accumulator system
for steel strapping

Wichtig!
Bitte diese Anleitung nicht wegwerfen.
Der Kunde verpflichtet sich, diese Betriebsanleitung allen Bedienungs- und Servicepersonen verständlich zu machen.

Important!
Do not dispose of this manual. It is the customer's responsibility to ensure that all operators and servicemen read and understand this manual.

TITAN
Wir halten zusammen

B 702 GB 07/11

Table of contents

		Page
1	**Manufacturer details**	**3**
2	**Technical Data**	**4**
3	**General**	**5**
	3.1 Environmental Protection	
4	**Safety Requirements**	**6**
5	**Description**	**8**
6	**Operation**	**9**
	6.1 Feeding of Uncoiler	
	6.2 Inserting of Strapping	
7	**Maintenance**	**12**
	7.1 Geberal	
	7.1 Lubricating point	
8	**Terminals**	**14**
9	**Manufacturer`s declaration**	**15**

1. Manufacturer details

Manufacturer:

TITAN Umreifungstechnik GmbH & Co. KG
Berliner Strasse 51-55

D-58332 Schwelm

Tel.: 02336/808-0
Fax.: 02336/808-208

2. Technical Data

General:

Weight:		127 kg
Measurements:	Length	L = 1000 mm
	Width	B = 500 mm
	Height	H = 2000 mm

Uncoiler:

Motor: 3-phase motor of 0,25 kW
Gear ratio: I=30

Strap Types:
Strap widths: 12mm –19mm

Coil sizes:

Core-Ø: 410mm
Outer-Ø: 600mm
Width: 60-70mm

Accumulator:

Switches: 3 proximity switches IFM

Storing capacity: 11,5m
(Increased storing capacity via electrical control)

Strapping head travel: 4m (adjustable)
Max. pulling force required: 10 N

Wired to clamps without control.

3. GENERAL INFORMATION

These operating instructions are intended to simplify acquainting with the system and the possibilities of application for the intended purpose.
The operating instructions contain important information concerning the safe, proper and efficient use of the system. Observation of the information will help to avoid danger, reduce repairs and stoppages and increase the reliability and service life of the system.
The operating instructions must always be available at the place of operation of the system. They must be read and observed by persons working with the system. This includes operation, refilling of strapping, fault elimination and maintenance.

In addition to the operating instructions and the regulations for accident prevention effective in the country of use and place of application, the recognised technical regulations for safety and proper working must also be observed.

CAUTION!

Used where there is danger to life and health.

WARNING!
Used for danger which can cause material damage.

NOTE!
Used for general information and information which if not followed can cause faults in the operating sequence.

3.1 INFORMATION ON ENVIRONMENTAL PROTECTION

This system is being manufactured without any physical or chemical substances which could be dangerous to health. For disposal of all the parts, the governmental instructions must be observed.

4. Safety Requirements

Intended use:
The system is intended to temporarily store steel strapping being used for operating a strapping machine.

The system was designed and built for safe use as part of a strapping operation.

The system is intended for the storage of steel strapping.

Be informed!
The operating instructions must be read prior to using the system.

Protect yourself!
Always wear eye and face protection as well as safety gloves when working on the system.

Caution:
Strap ends may snap on!
Hold the upper end when cutting and do not stand in strap vanishing line

Caution:
Strap may break!
Do not stand in strap vanishing line.

Danger:
of pinching!
Do not reach between and under pulleys when in operation

Danger:
Strap package only!
Do not reach between strap and package when in operation.

Always use genuine Titan spare parts!
The use of other than Titan spares will exclude warranty and liability.

Working place

Keep your working place tidy. Disorder at the working place may lead to the risk of accidents. During strapping operations pay attention that you stand safely and have a problem-free balance to prevent the risk of falling. Never operate the unit at an unfavourable working position!

Maintenance of the unit

Just a unit being problem-free is a safe unit. Regularly check the state of your unit for defective or worn parts. Never operate a unit which has defective or worn parts. Alterations to units are strictly forbidden. Disregarding this requirement may result in serious injuries.

Warranty and liability

TITAN GmbH & Co. KG grants a guarantee of six (6) months for all strapping units sold by it. Such guarantee covers all defects of which evidence can be given that they result from faulty manufacture or material defects.

- **Wearing parts are excluded from the guarantee.**

Warranty and liability claims are excluded, if they result from one or several of the following causes:

- Unintended use of the unit.
- Incompetent mounting, commissioning, operation and maintenance of the unit.
- Operating the unit with improper safety and protective installations.
- Disregard of the instructions in these operating instructions.
- Unauthorized structural alterations to the unit.
- Faulty monitoring of unit components subjected to wear.
- Incompetently performed repair works.

Alterations to the scope of supply with the aim to improve the product without notice.

5. Description

The combined uncoiling and strap accumulator system **ABS** consists of two units, the motor driven uncoiler **ARS** and strap accumulator **BSC**.

Uncoiler ARS:

1. The uncoiler (coiler) is only designed to take up coils of steel strapping.
2. It provides the strapping necessary for the operation of the strapping machine.
3. The uncoiler motor is activated if strapping is pulled out of the accumulator by the strapping machine during a strapping operation.
4. The gear motor is activated by the program of the PLC. The motor is switched off after the accumulator has been filled with strap, i. e. on the roller slide with the pulleys having reached its lowest position.
5. A proximity switch positioned close to the strap entering pulley, (the first pulley the strap is in contact with being fed by the uncoiler) signals „uncoiler empty", if not switched on by the strap.

Accumulator BSC:

The accumulator is intended to store the quantity of strapping necessary for filling the strap channel of a strapping machine. The electric strap feeding motor of the strapping machine pulls the strap out of the accumulator with very little effort. The strap recovered during strap retraction is kept tight by a downward movement of the roller slide pulleys of the accumulator.

Indication of strap reserve (optional):

This system is giving a signal informing that a strap reserve for a limited number of strapping operations is left on the uncoiler. The number of strapping operations can be preset on the adjusting element.

.

The accumulator has got the following controls:

1. Accumulator full
2. Accumulator empty
3. Strap end (uncoiler empty)
4. Indication of strap reserve (optional)

6. Operation

6.1 Feeding of uncoiler:

The signal "strap end uncoiler empty" having been given, the strapping cycle under way will be completed, a new strapping operation will, however, not be started. There will be a fault message for the machine.
A new coil of strapping has to be put, the plastic strapping be threaded through the accumulator and to be inserted into the strapping head.

A new coil of plastic strapping is put on the uncoiler in the following way:

1. Unscrew **lever nut 1** take off front disc.
2. Eliminate cardboardsleeve (if any) of empty coil.
3. Check strap width of the new coil and its direction of winding before putting the coil, roll it so that it stands parallel to the flange axis. **(Direction of uncoiling, see arrow on picture)**
4. For putting the coil swivel lifting device into coil eye and pull **lever 2** upwards until the coil sits on the flange.
5. Put front disc and fix **lever nut 1**.
6. Cut-off and take away packing straps.

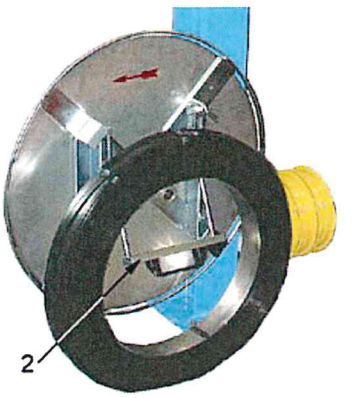

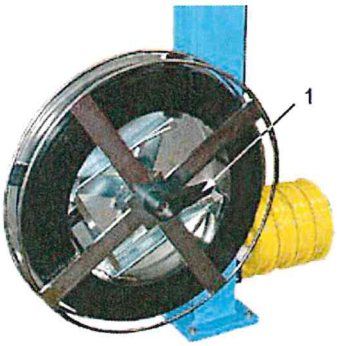

6.2 Inserting of strapping

1. Push **roller slide 5** upwards and **lever 2** (on the back side) downwards to extend **Bolt 3**. Let roller slide sit on this bolt.

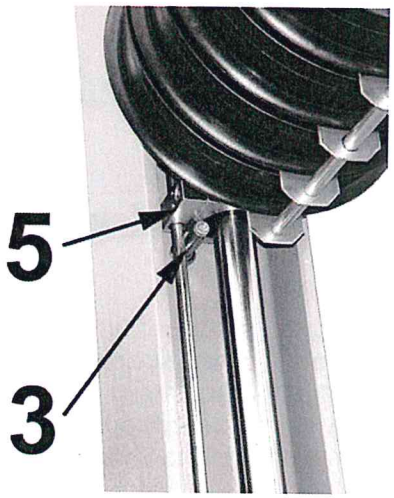

2. .**Push button 9** (filling of accumulator) to uncoil strap from strap dispenser.

3. The strap is to be inserted between top pulley and **strap guide 4**

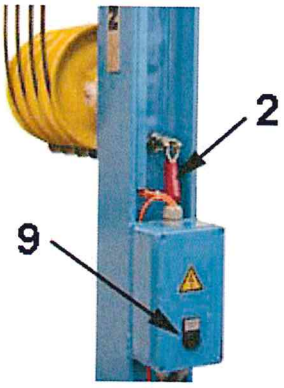

4. From the top **entering pulley 6** the strap is guided downwards to the first pulley of the roller slide. It is important that the **strap end lever 8** touches the strap.

5. The strap has to be put around all pulleys on top as well as on the roller slide.

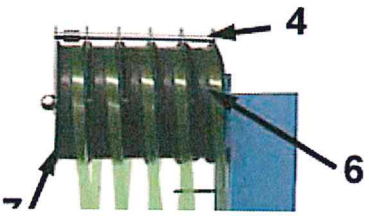

6. From the upper **exit pulley 7** of the accumulator the strap is fed to a guide pulley and from there to the strapping head.

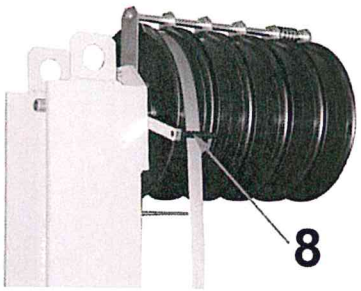

7. Insert the strap end which should be well cut and without burr into the entering strap guide of the strapping head until feeling an obstacle.

8. Move upwards the fixing lever of the roller slide to release the roller slide.

9. Now fill the accumulator with strap so that the roller slide will sit on the stop bumper.

Important: ***Please make sure that the fixing lever 2 for the roller slide is always in its upper position when the machine is in operation, i.e. with the bolt 3 (photo 2) retracted.***

7. Maintenance

7.1 General:

- Regular and careful maintenance insures continuous avalability of the uncoiling and accumulator system **ABS**.
- Keep the uncoiling and accumulator system always clean.
- Keep guide shaft free of dirt and obstacles.

Attention!
All parts are to be inspected in regular intervals, and defective parts have to be exchanged.

Non-observation of this indication may lead to faults and cause accidents.

Do only use **genuine – Titan – spare parts!**
The use of other than Titan – spares
will exclude service and warranty.

Tool inspection!

Perform a **daily** visual inspection of the outside of the unit. The early detection of damaged parts extends the life of the unit. Replace all damaged parts **immediately** with Original Titan spare parts.

7.2 Lubricating point:

Lubricating point for set collars

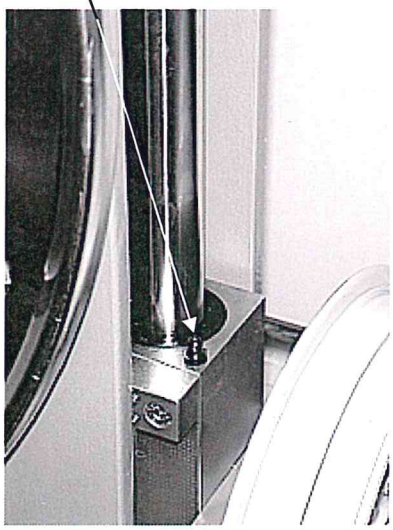

For first and consecutive lubrication of set collars:
Lubricate with shaft inside until lubricant flows off.

Weekly control of lubricating oil film on guide shaft.

8. Terminals

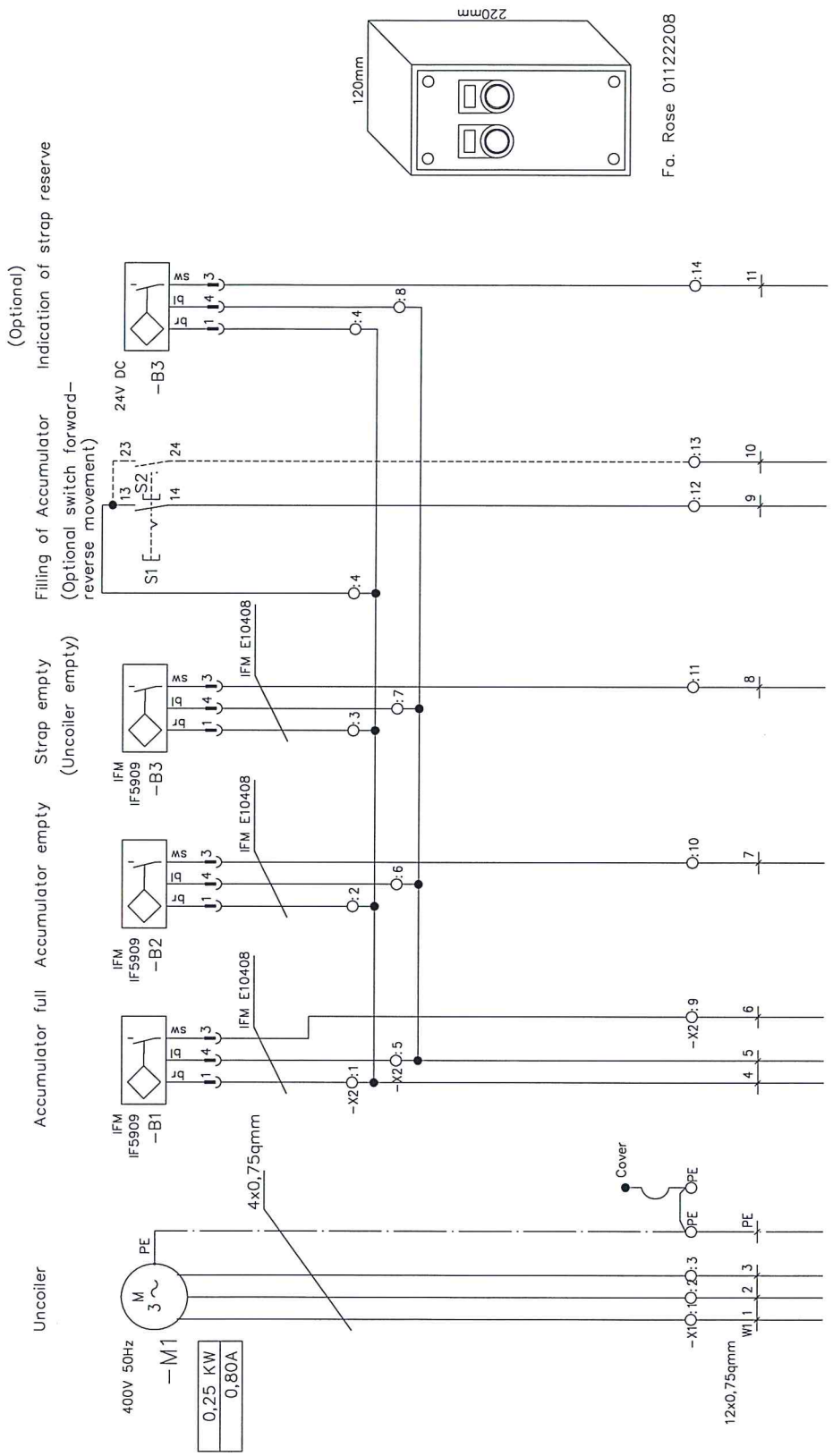
220mm
120mm
Fa. Rose 01122208
(Optional)
Indication of strap reserve
Filling of Accumulator
(Optional switch forward-reverse movement)
Strap empty
(Uncoiler empty)
Accumulator empty
Accumulator full
Uncoiler
24V DC
-B3
S1
S2
IFM E10408
IFM IF5909
-B3
-B2
-B1
-M1
400V 50Hz
0,25 KW
0,80A
4x0,75qmm
12x0,75qmm
Cover
PE
-X1
-X2
W1.1

9. Declaration of incorporation

Declaration of incorporation of partly completed machinery

in terms of the directive 2006/42/EC on machinery, Annex II B

The manufacturer

TITAN Umreifungstechnik GmbH & Co.KG
Berliner Straße 51-55

58332 Schwelm

herewith declares that the combined uncoiling and strap accumulator system for steel strapping described below

Type designation: ABS
Serial number: 702 0002

corresponds to the essential requirements of the following directives (the requirements of which have been fulfilled, see annex), as far as is possible within the scope of this delivery:

Directive 2006/42/EC on machinery
Directive 2004/108/EC relating to EMC

Used harmonised standards, published in the official journal of the EU:

EN ISO 12100-1: 2004,	Safety of machinery – Basic concepts, general principles for design – Part 1: Basic terminology, methodology
EN ISO 12100-2: 2004,	Safety of machinery – Basic concepts, general principles for design – Part 2: Technical principles and specifications
EN 1010-1:2005	Safety of machinery – Safety requirements for the design and construction of printing and paper processing machines – Part 1: General requirements (Final concept 02/2003)
EN 60204-1:2007,	Safety of machinery – Electrical equipment of machines – Part 1: General requirements

Furthermore the manufacturer declares, that the technical documentation for this partly completed machinery is compiled in accordance with part B of Annex VII and undertakes to transmit, in response to a reasoned request by the national authorities, the relevant information of the partly completed machinery in digital form.

This partly completed machinery must not be put into service until the final machinery into which it is to be incorporated has been declared in conformity with the provisions of this directive and for which an EC declaration of conformity of the machinery in accordance with part A Annex II has been published.

Authorized representative for the compilation of the technical documentation:

TITAN Umreifungstechnik GmbH & Co. KG
Berliner Strasse 51-55
58332 Schwelm

Schwelm, the 08.02.2010

Peter Wilhelm Lenzen jr.
President

Annex

Requirements of Annex I from the directive 2006/42/EC which are fulfilled. The numbers relate to the parts of Annex I:

1.1.2., 1.1.3., 1.1.5., 1.2.2., 1.3.1., 1.3.2., 1.3.4., 1.5.1., 1.5.8., 1.6.1., 1.6.2., 1.6.3., 1.6.4., 1.6.5., 1.7.1., 1.7.2., 1.7.3., 1.7.4.1., 1.7.4.2., 1.7.4.3.

Das TITAN Gesamtprogramm

Umreifungsgeräte
für Stahl- und Kunststoffband

Umreifungsmaschinen/-köpfe
für Stahl- und Kunststoffband

Ballenumreifungssysteme
Stahl- und Kunststoffband

Crimpsysteme

Stanzverbinder

Verpackungsband
aus Stahl und Kunststoff

Verschlußhülsen

Zubehör

The TITAN range of products

Strapping tools
for steel and plastic strap

Strapping machines and heads
for steel and plastic strap

Baling systems
steel and plastic strap

Crimp systems

Strip joining devices

Strap
Steel and plastic

Seals

Accessories

La gamme de produits TITAN

Appareils de cerclage
pour feuillard d'acier et plastique

Machines et têtes de cerclage
pour feuillard d'acier et plastique

Systèmes de cerclage de balles
feuillard d'acier et plastique

Systèmes crimp

Système d'agrafage de bobines

Feuillard d'emballage
acier et plastique

Chapes

Accessoires

TITAN Umreifungstechnik GmbH & Co. KG
Postfach 440, 58317 Schwelm
Berliner Straße 51-55, 58332 Schwelm
Telefon: +49 (0) 23 36 / 8 08-0
Telefax: +49 (0) 23 36 / 8 08-208
emailadresse: info@titan-schwelm.de
www.titan-schwelm.de

Technische Änderungen vorbehalten
Subject to technical alterations
Sous réserve de modification techniques

Spare Parts List

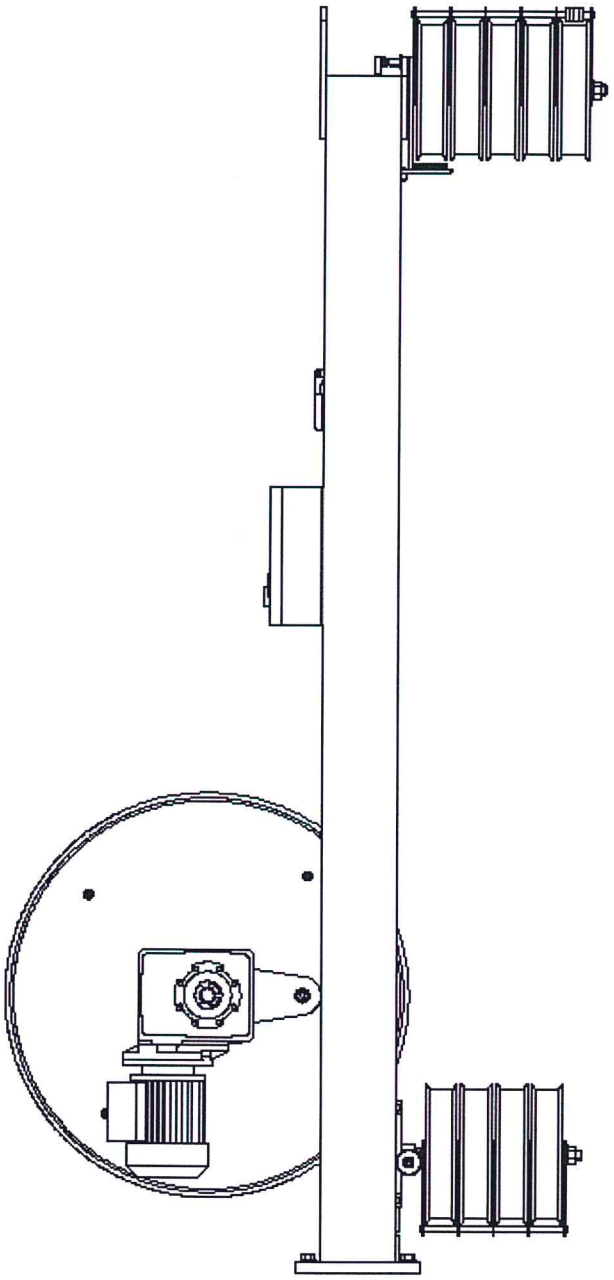

ABS

702 **0002**

Combined uncoiling and
strap accumulator system
for steel strapping

Accumulator	**0002 BSC**
Uncoiler	**0002 ARS**

Deflector pulley	617 **0001**
Indication of strap reserve	617 **0001**

)2 GB 03/09

TITAN
Wir halten zusammen

INDEX OF CONTENTS

1 ABS 3
1.1 Spare part list ABS 4
2 Bestellformular / Order form / Formulaire de commande 5

1 ABS

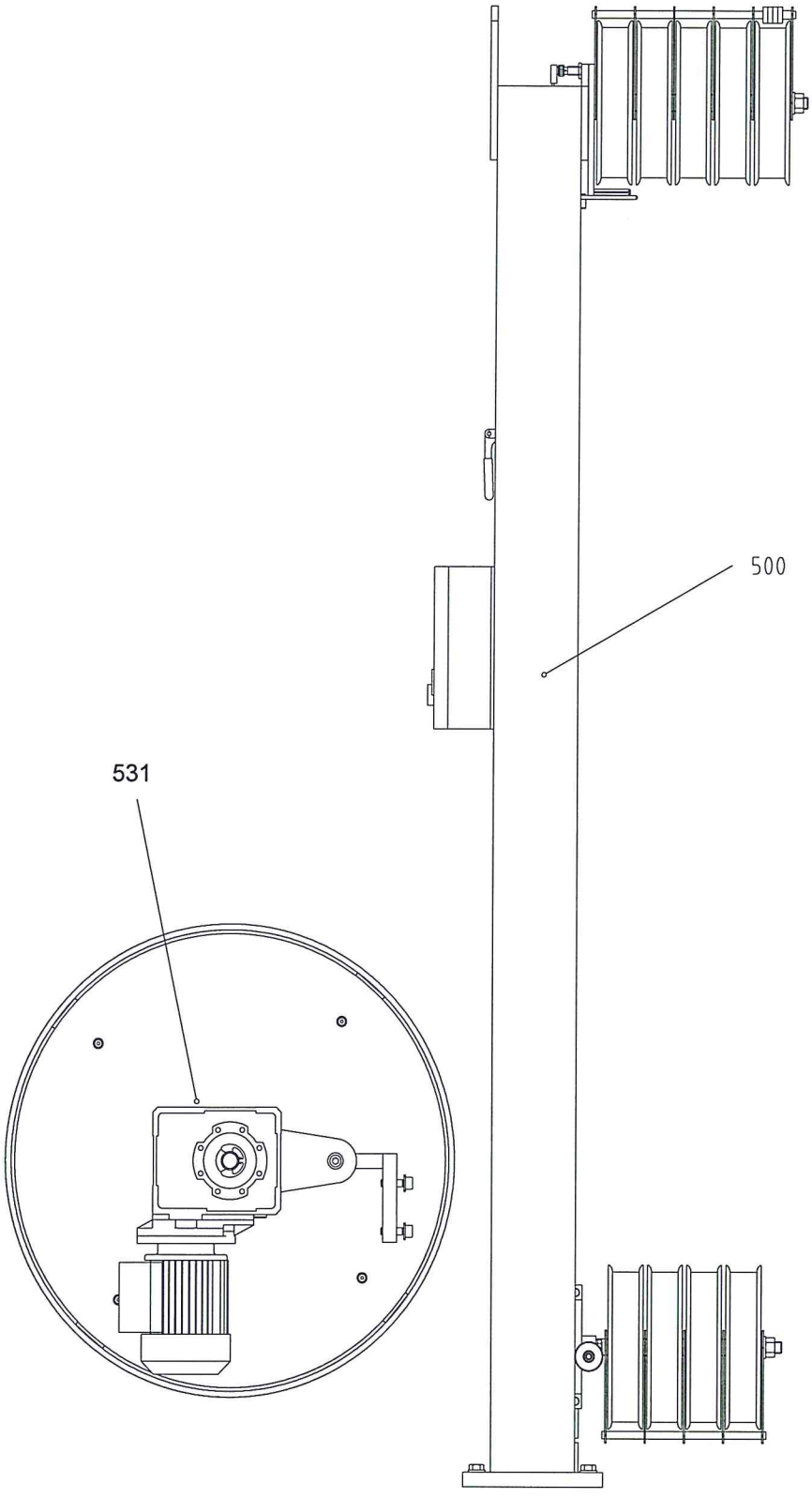

1.1 Spare part list ABS

Item.	Ordering code	Description	Dimensions	Pcs	Remarks
500	**7020002 – 500**	**Strap accumulator BSC Complete unit**	**615 0002**		
531	**7020002 – 531**	**Uncoiler ARS Complete unit**	**604 0002**		

2 Bestellformular / Order form / Formulaire de commande

TITAN Umreifungstechnik GmbH & Co. KG
Ersatzteilservice / Spare parts service / Service des pièces de rechange
Berliner Str. 51 – 55
D-58332 Schwelm

FAX: +49 (2336) 808-208

Pos.	Bestell-Nr. Order No. N° de commande	Benennung	Description	Dénomination	St. Pcs. Pc.
1	7010002 – 501	Abroller ARK-F			1
⇑ Beispiel ⇑ / ⇑ Example ⇑ / ⇑ Exemple ⇑					

Firma / Company / Société	
Kontaktperson / Contact person / Personne de contact	
Straße / Street / Rue	
PLZ, Ort / Zip code, place / Code postal, ville	
Telefon / Phone / Téléphone	
Fax, E-Mail	

Datum, Date, Date Unterschrift, Signature, Signature

TITAN

Das TITAN Gesamtprogramm

Umreifungsgeräte
für Stahl- und Kunststoffband

Umreifungsmaschinen/-köpfe
für Stahl- und Kunststoffband

Ballenumreifungssysteme
Stahl- und Kunststoffband

Crimpsysteme

Stanzverbinder

Verpackungsband
aus Stahl und Kunststoff

Verschlußhülsen

Zubehör

The TITAN range of products

Strapping tools
for steel and plastic strap

Strapping machines and heads
for steel and plastic strap

Baling systems
steel and plastic strap

Crimp systems

Strip joining devices

Strap
Steel and plastic

Seals

Accessories

La gamme de produits TITAN

Appareils de cerclage
pour feuillard d'acier et plastique

Machines et têtes de cerclage
pour feuillard d'acier et plastique

Systèmes de cerclage de balles
feuillard d'acier et plastique

Systèmes crimp

Système d'agrafage de bobines

Feuillard d'emballage
acier et plastique

Chapes

Accessoires

TITAN Umreifungstechnik GmbH & Co. KG
Postfach 440, 58317 Schwelm
Berliner Straße 51-55, 58332 Schwelm
Telefon: +49 (0) 23 36 / 8 08-0
Telefax: +49 (0) 23 36 / 8 08-208
emailadresse: info@titan-schwelm.de
www.titan-schwelm.de

Technische Änderungen vorbehalten
Subject to technical alterations
Sous réserve de modification techniques

Ersatzteilliste

Spare parts list

Liste des pièces de rechange

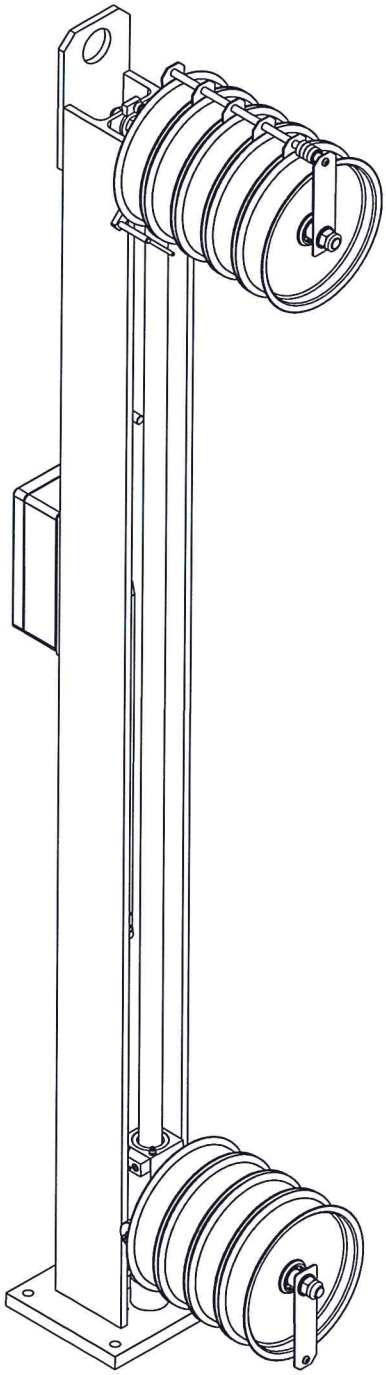

BSC

615 0002

Bandspeicher
für Stahlband

Accumulator
for steel strapping

Accumulateur
pour feuillard d'acier

TITAN
Wir halten zusammen

Inhaltsverzeichnis - Table of contents - Sommaire

Seite / Page / Page

Hinweise zur Ersatzteilbestellung 3
Information on how to order spare parts 3
Remarques pour la commande de pièces de rechange 3
1. BSC 4
2. Ersatzteilliste / Spare parts list / Liste des pièces de rechange 5
Bestellformular / Order form / Formulaire de commande 8

Hinweise zur Ersatzteilbestellung
Information on how to order spare parts
Remarques pour la commande de pièces de rechange

- Bitte geben Sie zur Bestellung von Ersatzteilen die Bestellnummer an, bitte benutzen Sie das **Bestellformular am Ende dieser Ersatzteilliste.**

- When ordering spare parts please indicate the order number, please use the **order form at the end of this spare parts list.**

- Pour commander des pièces de rechange veuillez indiquer le numéro de commande, vous trouverez à la fin de cette **liste de pièces de rechange un formulaire de commande.**

- **Verwenden Sie nur Original – TITAN – Ersatzteile!**
  Die Verwendung von anderen als TITAN – Ersatzteilen schließt Garantieleistungen und Haftpflicht aus.

- **Only use original TITAN spare parts!**
  The use of other manufacturer's parts excludes liability and warranty services.

- **Utilisez uniquement des pièces de rechange TITAN d'origine!**
  L'utilisation de pièces de rechange d'autre origine exclut toutes prestations de garantie et toute responsabilité.

1. BSC

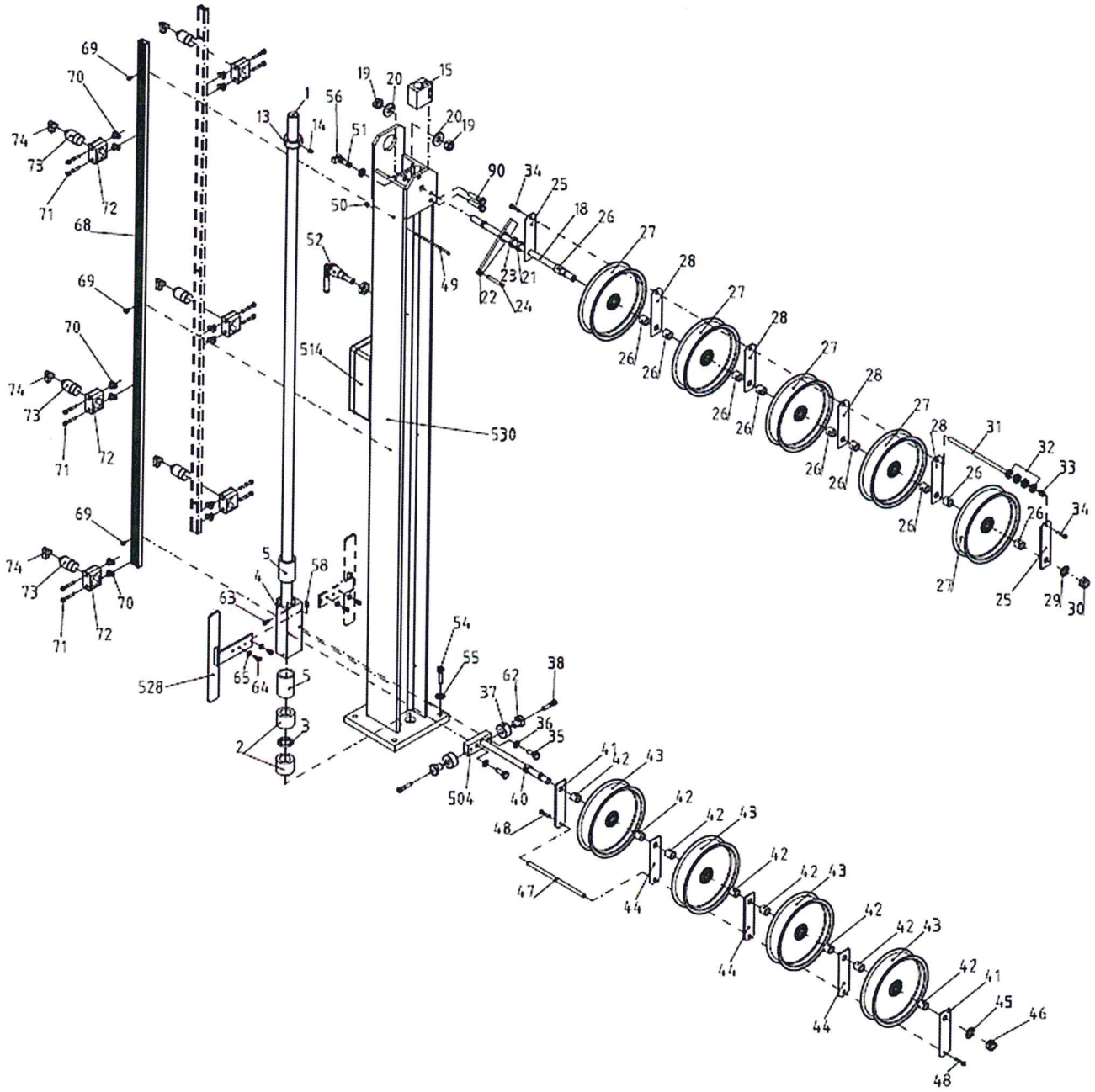
69
70
74
73
71
72
68
1
13
14
56
51
19
20
15
20
19
50
52
49
90
34
25
18
26
27
28
23
21
22
24
514
530
31
32
33
34
29
30
5
4
58
63
65
64
528
54
55
62
38
37
36
35
504
40
41
42
43
48
47
44
45
46

2. Ersatzteilliste / Spare parts list / Liste des pièces de rechange

Pos.	Bestell-Nr. Order code N° cde	Benennung	Description	Dénomination	St. Pcs. Pc.	
1	6150002-1	Führungswelle	Guide shaft	Rouleau de guidage	1	
2	**6150002-2**	**Anschlagpuffer**	**Stop bumper**	**Tampon de butée**	**2**	
3	6150002-3	Dämpfungsscheibe	Damping washer	Disque d'amortissement	1	
4	**6150002-4**	**Rollenschlitten**	**Roller slide**	**Glissoir à rouleaux**	**1**	
5	6150002-5	Kugelbuchse	Ball sleeve	Douilles sphérique	2	
13	**6150002-13**	**Endanschlag**	**Limit stop**	**Butée**	**1**	
14	6150002-14	Schraube M8 x 12 DIN 912	Screw M8 x 12 DIN 912	Vis M8 x 12 DIN 912	1	
15	**6150002-15**	**Klemmstück**	**Clamping piece**	**Elément de serrage**	**1**	
18	**6150002-18**	**Achse**	**Axle**	**Axe**	**1**	
19	6150002-19	Sechskantmutter M16 DIN 439	Hexagon nut M16 DIN 439	Écrou hexagonal M16 DIN 439	2	
20	6150002-20	Spannscheibe Ø 16 DIN 6796	Spring washer Ø 16 DIN 6796	Rondelle élastique bombée Ø 16 DIN 6796	2	
21	**6150002-21**	**Distanzhülse**	**Distance sleeve**	**Douille d'écartement**	**1**	
22	**6150002-22**	**Bandendehebel**	**Strap end lever**	**Levier pour fin de feuillard**	**1**	
23	**6150002-23**	**DU-Buchse**	**DU-sleeve**	**Douille DU**	**1**	
24	6150002-24	Spannstift Ø 8 x 60 DIN 7343	Spring pin Ø 8 x 60 DIN 7343	Goupille de serrage Ø 8 x 60 DIN 7343	1	
25	**6150002-25**	**Endblech**	**End plate**	**Plaque de bout**	**2**	
26	**6150002-26**	**Distanzhülse**	**Distance sleeve**	**Douille d'écartement**	**10**	
27	6150002-27	Spannrolle	Pulley	Roue	5	
28	**6150002-28**	**Trennblech**	**Separating plate**	**Plaque de séparation**	**4**	
29	6150002-29	Scheibe Ø 17 DIN 125-B	Disc Ø 17 DIN 125-B	Disque Ø 17 DIN 125-B	1	
30	6150002-30	Sechskantmutter M16 DIN 985	Hexagon nut M16 DIN 985	Écrou hexagonal M16 DIN 985	1	
31	**6150002-31**	**Bandführungsachse**	**Strap guide axle**	**Axe de guidage de feuillard**	**1**	
32	6150002-32	Rillenkugellager 608 2Z DIN 625	Groove ball bearing 608 2Z DIN 625	Roulement rainuré à billes 608 2Z DIN 625	4	
33	**6150002-33**	**Klemmhülse**	**Clamping sleeve**	**Douille de serrage**	**1**	
34	6150002-34	Linsenschraube M6 x 10 Unbrako	Lens head screw M6 x 10 Unbrako	Vis à tête conique bombée M6 x 10 Unbrako	2	
35	6150002-35	Sechskantschraube M10 x 30 DIN 933	Hexagon screw M10 x 30 DIN 933	Vis à tête hexagonale M10 x 30 DIN 933	2	
36	6150002-36	Scheibe Ø 10,5 DIN 125	Disc Ø 10.5 DIN 125	Disque Ø 10,5 DIN 125	2	
37	**6150002-37**	**Laufrolle**	**Roller**	**Galet de roulement**	**2**	

V = Verschleißteile ; Wearing parts ; Pièces d'usure
R = Austauschteile ; Replacement parts ; Pièces d'échange
B= bei Bedarf ; if necessary ; au besoin
O= Option ; Option ; Option

Pos.	Bestell-Nr. Order code N° cde	Benennung	Description	Dénomination	St. Pcs. Pc.	
38	6150002-38	Schraube M8 x 30 DIN 912	Screw M8 x 30 DIN 912	Vis M8 x 30 DIN 912	2	
40	**6150002-40**	**Distanzhülse, kurz**	**Distance sleeve, short**	**Douille d'écartement, court**	**1**	
41	**6150002-41**	**Endblech**	**End plate**	**Plaque de bout**	**2**	
42	**6150002-42**	**Distanzhülse**	**Distance sleeve**	**Douille d'écartement**	**8**	
43	6150002-43	Spannrolle	Pulley	Roue	4	
44	**6150002-44**	**Trennblech**	**Separating plate**	**Plaque de séparation**	**3**	
45	6150002-45	Scheibe Ø 17 DIN 125-B	Disc Ø 17 DIN 125-B	Disque Ø 17 DIN 125-B	1	
46	6150002-46	Sechskantmutter M16 DIN 985	Hexagon nut M16 DIN 985	Écrou hexagonal M16 DIN 985	1	
47	**6150002-47**	**Bandführungsachse, kurz**	**Strap guide axle, short**	**Axe de guidage de feuillard, court**	**1**	
48	6150002-48	Linsenschraube M6 x 10 Unbrako	Lens head screw M6 x 10 Unbrako	Vis à tête conique bombée M6 x 10 Unbrako	2	
49	**6150002-49**	**Gegenhalter**	**Back stop**	**Contre-bouterolle**	**1**	
50	6150002-50	Sechskantmutter M5 DIN 985	Hexagon nut M5 DIN 985	Écrou hexagonal M5 DIN 985	1	
51	6150002-51	Initiator (IFM) M12 x 1	Initiator (IFM) M12 x 1	Commutateur capacitif (IFM) M12 x 1	1	
52	6150002-52	Feststellhebel	Fixing lever	Levier de blocage	1	
54	6150002-54	Sechskantschraube M12 x 40 DIN 933	Hexagon screw M12 x 40 DIN 933	Vis à tête hexagonale M12 x 40 DIN 933	4	
55	6150002-55	Spannscheibe Ø 12 DIN 6796	Spring washer Ø 12 DIN 6796	Rondelle élastique bombée Ø 12 DIN 6796	4	
56	6150002-56	Stecker (IFM)	Plug (IFM)	Connecteur (IFM)	1	
58	6150002-58	Schmiernippel M8 x 1 71412	Greasing device M8 x 1 71412	Graisseur M8 x 1 71412	1	
62	**6150002-62**	**Exzenterbuchse**	**Eccentric bush**	**Coussinet excentrique**	**2**	
63	6150002-63	Schraube M6 x 8 DIN 912	Screw M6 x 8 DIN 912	Vis M6 x 8 DIN 912	1	
64	6150002-64	Schraube M6 x 12 DIN 912	Screw M6 x 12 DIN 912	Vis M6 x 12 DIN 912	2	
65	6150002-65	Spannscheibe Ø 6 DIN 6796	Spring washer Ø 6 DIN 6796	Rondelle élastique bombée Ø 6 DIN 6796	2	
68	**6150002-68**	**Tragschiene STAUFF TS 14**	**Mounting rail STAUFF TS 14**	**Profilé support STAUFF TS 14**	**1**	
69	6150002-69	Schraube M5 x 8 DIN 6912	Screw M5 x 8 DIN 6912	Vis M5 x 8 DIN 6912	3	

V = Verschleißteile ; Wearing parts ; Pièces d'usure
R = Austauschteile ; Replacement parts ; Pièces d'échange
B= bei Bedarf ; if necessary ; au besoin
O= Option ; Option ; Option

Pos.	Bestell-Nr. Order code N° cde	Benennung	Description	Dénomination	St. Pcs. Pc.	
70	6150002-70	Schienenmutter STAUFF SM	Rail nut STAUFF SM	Écrou de rail STAUFF SM	6	
71	6150002-71	Schraube M6 x 40 DIN 912	Screw M6 x 40 DIN 912	Vis M6 x 40 DIN 912	6	
72	6150002-72	Rohrschelle STAUFF PA 430	Pipe clamp STAUFF PA 430	Bride d'attache STAUFF PA 430	3	
73	6150002-73	Initiator IFM II 5430	Initiator IFM II 5430	Commutateur capacitif IFM II 5430	3	
74	6150002-74	Stecker IFM E 10509	Plug IFM E 10509	Connecteur IFM II 10509	3	
80	**6150002-80**	**Bodenplatte**	**Base plate**	**Plaque de fond**	**1**	
90	6150002-90	Senkschraube M10 x 55 ISO 10642	Countersunk screw M10 x 55 ISO 10642	Vis noyée M10 x 55 ISO 10642	2	
504	**6150002-504**	**Rollenhalterung**	**Roller holding device**	**Fixage à rouleaux**	**1**	
507	**6150002-507**	**Bandvorratsanzeige**	**Indication of strap reserve**	**Indication de réserve de feuillard**	**1**	
511	**6150002-511**	**Umlenkrolle**	**Deflector pulley**	**Poulie de déviation**	**1**	
514	**6150002-514**	**Schaltkasten**	**Switch box**	**Coffret de commande**	**1**	
528	**6150002-528**	**Schaltfahne kpl.**	**Switch lug cpl.**	**Talon commutateur**	**1**	
530	**6150002-530**	**Ständer**	**Column**	**Support**	**1**	

V = Verschleißteile ; Wearing parts ; Pièces d'usure
R = Austauschteile ; Replacement parts ; Pièces d'échange
B= bei Bedarf ; if necessary ; au besoin
O= Option ; Option ; Option

Bestellformular / Order form / Formulaire de commande

TITAN Umreifungstechnik GmbH & Co. KG
Ersatzteilservice / Spare parts service / Service des pièces de rechange
Berliner Str. 51 – 55
D-58332 Schwelm

FAX: +49 (2336) 808-208

Pos.	Bestell-Nr. Order No. N° de commande	Benennung	Description	Dénomination	St. Pcs. Pc.
1	6150002-1	Führungswelle	Guide shaft	Rouleau de guidage	1
⇑ Beispiel ⇑			⇑ Example ⇑	⇑ Exemple ⇑	

Firma / Company / Société	
Kontaktperson / Contact person / Personne de contact	
Straße / Street / Rue	
PLZ, Ort / Zip code, place / Code postal, ville	
Telefon / Phone / Téléphone	
Fax, E-Mail	

Datum, Date, Date Unterschrift, Signature, Signature

Das TITAN Gesamtprogramm	The TITAN range of products	La gamme de produits TITAN
Umreifungsgeräte für Stahl- und Kunststoffband	**Strapping tools** for steel and plastic strap	**Appareils de cerclage** pour feuillard d'acier et plastique
Umreifungsmaschinen und Aggregate für Stahl- und Kunststoffband	**Strapping machines and aggregates** for steel and plastic strap	**Machines et têtes de cerclage** Pour feuillard d'acier et plastique
Ballenumreifungssysteme für Stahl- und Kunststoffband	**Baling systems** for steel and plastic strap	**Systèmes de cerclage de balles** Pour feuillard d'acier et plastique
Crimpsysteme	**Crimp systems**	**Systèmes crimp**
Stanzverbinder	**Strip joining devices**	**Système d'agrafage de bobines**
Verpackungsband aus Stahl- und Kunststoffband	**Strapping** Steel and plastic strap	**Feuillard d'emballage** Acier et plastique
Verschlusshülsen	**Seals**	**Chapes**
Zubehör	**Accessories**	**Accessoires**

TITAN Umreifungstechnik GmbH & Co. KG
Postfach 440, 58317 Schwelm
Berliner Straße 51-55, 58332 Schwelm
Telefon: +49 (0) 23 36 / 8 08-0
Telefax: +49 (0) 23 36 / 8 08-208
E-Mail: info@titan-schwelm.de
www.titan-schwelm.de

Technische Änderungen vorbehalten
Subject to technical alterations
Sous réserve de modifications techniques

Spare Parts List

Ersatzteilliste

Liste des pièces de rechange

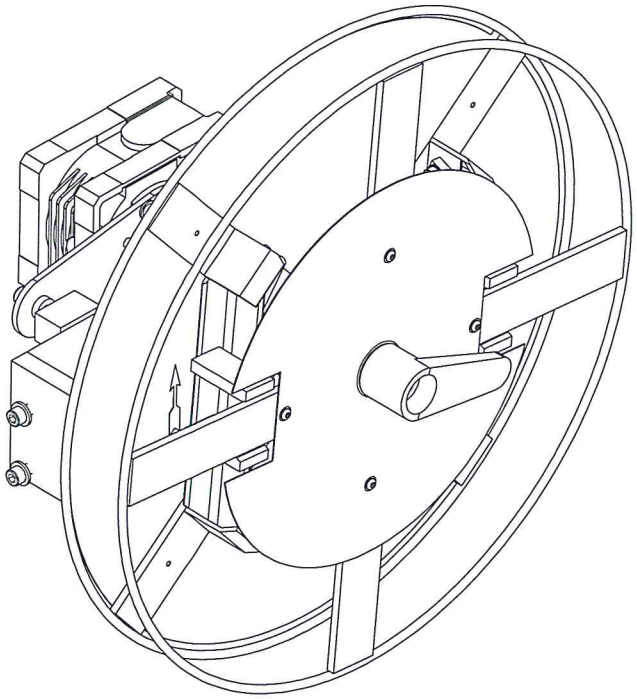

ARS

604 **0002**

Uncoiler
for steel strapping

TITAN
Wir halten zusammen

E 604 GB 11/11

INDEX OF CONTENTS

1 ARS 3

1.1 Spare parts ARS 3

2 Order form 4

1 ARS

1.1 Spare parts ARS

Pos.-Nr.	Bestell-Nr.	Benennung	Abmessung	Stück	Bemerkung
100	6040002 – 100	Flange block		2	
102	6040002 – 102	Cap screw	M 8 x 16	6	
103	6040002 – 103	Tension washer	8	6	
116	6040002 – 116	Cap screw	M 6 x 20	3	
117	6040002 – 117	Disk	6,4	3	
122	6040002 – 122	Lever nut		1	
123	6040002 – 123	Cap screw	M 10 x 30	2	
124	6040002 – 124	Tension washer	10	2	
128	6040002 – 128	Cap screw	M 8 x 30	1	
129	6040002 – 129	Disk	8,4	3	
130	6040002 – 130	Tension washer	8	3	
131	6040002 – 131	PVC – Arrow		1	
132	6040002 – 132	Tension washer	6	3	
133	6040002 – 133	**Cover**		**2**	
134	6040002 – 134	Lens head screw	M 6 x 10	8	
135	6040002 – 135	Tension washer	6	8	
136	6040002 – 136	Cap srew	M 8 x 25	2	
137	6040002 – 137	Disk	8,4	2	
138	6040002 – 138	Hexagon nut	M 8	2	
139	6040002 – 139	Handle	137 x 26 x 41	1	
140	6040002 – 140	Thrust washer	S 8	2	
141	6040002 – 141	Cap srew	M 8 x 16	2	
142	6040002 – 142	**Fixing tube**	**Ø 55 x 5**	**1**	
143	6040002 – 143	Threaded pin	M 6 x 8	1	
145	**6040002 – 145**	**Drive shaft**		**1**	
146	6040002 – 146	Tension pin	8x50	2	
147	6040002 – 147	Torque support		1	
148	6040002 – 148	Cap screw	M8x16	6	
149	6040002 – 149	Tension washer	8	6	
150	6040002 – 150	Cap screw	M10x50	1	
151	6040002 – 151	Hexagon nut	M10	1	
152	6040002 – 152	Thrust washer	24	1	
153	6040002 – 153	Worm gear		1	
154	6040002 – 154	Three phase motor		1	
155	6040002 – 155	Feather key		2	
506	**6040002 – 506**	**Clamping sleeve**		**1**	
517	**6040002 – 517**	**Steel flange rear**		**1**	
518	**6040002 – 518**	**Lever**		**1**	
519	**6040002 – 519**	**Steel flange front**		**1**	
524	**6040002 – 524**	**Holder**		**1**	
525	**6040002 – 525**	**Worm gear a. Motor kompl.**		**1**	

TITAN

2 Order form

TITAN Umreifungstechnik GmbH & Co. KG
Ersatzteilservice / Spare parts service / Service des pièces de rechange
Berliner Str. 51 – 55
D-58332 Schwelm
FAX: +49 (2336) 808-208

Pos.	Bestell-Nr. Order No. N° de commande	Benennung	Description	Dénomination	St. Pcs. Pc.
100	6040002 – 100		Flange block		1
⇑ Beispiel ⇑ / ⇑ Example ⇑ / ⇑ Exemple ⇑					

Bitte entsprechende Bandbreite ankreuzen Please tick off the relevant strap width desired Veuillez cocher la largeur de feuillard adéquate			
9 mm ☐	12 mm ☐	16 mm ☐	19 mm ☐
Bitte entsprechende Bandqualität ankreuzen Please tick off the relevant strap quality desired Veuillez cocher la qualité de feuillard adéquate			
PP ☐		PET ☐	

Firma / Company / Société	
Kontaktperson / Contact person / Personne de contact	
Straße / Street / Rue	
PLZ, Ort / Zip code, place / Code postal, ville	
Telefon / Phone / Téléphone	
Fax, E-Mail	

Datum, Date, Date Unterschrift, Signature, Signature

TITAN

Das TITAN Gesamtprogramm

Umreifungsgeräte
für Stahl- und Kunststoffband

Umreifungsmaschinen/-köpfe
für Stahl- und Kunststoffband

Ballenumreifungssysteme
Stahl- und Kunststoffband

Crimpsysteme

Stanzverbinder

Verpackungsband
aus Stahl und Kunststoff

Verschlußhülsen

Zubehör

The TITAN range of products

Strapping tools
for steel and plastic strap

Strapping machines and heads
for steel and plastic strap

Baling systems
steel and plastic strap

Crimp systems

Strip joining devices

Strap
Steel and plastic

Seals

Accessories

La gamme de produits TITAN

Appareils de cerclage
pour feuillard d'acier et plastique

Machines et têtes de cerclage
pour feuillard d'acier et plastique

Systèmes de cerclage de balles
feuillard d'acier et plastique

Systèmes crimp

Système d'agrafage de bobines

Feuillard d'emballage
acier et plastique

Chapes

Accessoires

TITAN Umreifungstechnik GmbH & Co. KG
Postfach 440, 58317 Schwelm
Berliner Straße 51-55, 58332 Schwelm
Telefon: +49 (0) 23 36 / 8 08-0
Telefax: +49 (0) 23 36 / 8 08-208
emailadresse: info@titan-schwelm.de
www.titan-schwelm.de

Technische Änderungen vorbehalten
Subject to technical alterations
Sous réserve de modification techniques

Stck	Benennung	DIN	Werkstoff	Abmessung	Länge	Obfl	Pos.	EDV-Nr.	Menge	T
Qty.	Designation	Manufacturer	Material	Dimensions	Length	Surf.		Code No.	Qty.	EK
			Order No.	mm	mm	RAL				F
	Standard components									
1	**Strapping head VS11L**	**No.: 73095**	strap: **16x0.5** mm					**4802010302**	**1**	**T**
	voltage 24 VDC									
	Note:									
	The subassembly 4802028020 " head on package " will be separately mounted by the manufacturer and the proximity switches B7 and B8 wired.									
1	Strap dispenser unit ABS, incl. base plate 4580201460							**7670200002**	**1**	**T**
	Attention: mirror-image mounted (dispenser round plate RH side)									
4	Shear connector cartridge M16 UPAT-UKA-3							**01999300160**	**4**	**T**
4	UPAT anchor rod with washer and nut M16/190							**01999316190**	**4**	**T**

Stck	Benennung	DIN	Werkstoff	Abmessung	Länge	Obfl	Pos.	EDV-Nr.	Menge	T
Qty.	Designation	Manufacturer	Material	Dimensions	Length	Surf.		Code No.	Qty.	EK
			Order No.	mm	mm	RAL				F
	Machine frame									
1	Framework	welded part				7038		**4540017631**	**1**	**F**
4	Hex. screw	933	8.8	M16 x 80		galvd			**4**	**T**
4	Hex. nut	934	8	M16				**01408160002**	**4**	**T**
4	Shear connector cartridge M20 UPAT-UKA-3							**01999300200**	**4**	**T**
4	UPAT anchor rod with washer and nut M20/260							**01999320260**	**4**	**T**
2	Plastic tube cap for 140x80x4 tube, Item no. 7515, make Pulverich							**01740140804**	**2**	**T**
2	Stop					7038		**4540006395**	**2**	**F**
4	Hex. screw	933	8.8	M16 x 40		galvd		**01013160401**	**4**	**T**
4	Conical spring washer	6796	FSt	16				**01340016010**	**4**	**T**
2	Schwingmetall-buffer stop 55 shore A								**2**	**EK**
	Type 38652, make Anton Klocke, Bielefeld									
2	Hex. screw	933	8.8	M10 x 40		galvd		**01013160401**	**2**	**T**
2	Conical spring washer	6796	FSt	10				**01340016010**	**2**	**T**
1	SEW-AC brake motor, IEC-type								**1**	**EK**
	model: DRE90L4BE2/FF/TF/XV2A/Z/DH									
	Power = 1.5 kW; n=1430 min^{-1}									
	Motor voltage: 460V, 60Hz									
	Brake voltage: 24V, DC (power on brake release)									
	Type: B5									
	a_1= Ø200 (IEC)									
	b_1= Ø130j6									
	e_1= Ø165									
	d= Ø24k6x50 long									
	Bearings life-time lubricated									
	Protection class IP55									
	Insulation class H									
	Max. temperature 50°C, max. air humidity 100 %									
	Brake torquee: 20Nm									
	Brake motor with protected brake and flywheel mass									
	Earthing screw outside the terminal box									
	Surface proteced and corrosion protected type									
	with condensation water drain hole									
	Motor type plate V2A									
	Motor data sheets and certificates acc. to EN 10204, DIN 50049-2.1									
	CE-declaration of conformity									
	SASOcertificate									
	RAL 7031									
	with encoder mounting device:									
	makeT&R Elektronic, type: CEV 65M / 110-01460 (with Profibus), (shaft Ø 10mm)									
	with extended venting hood for T&R encoder									
	with thermistor TF up to 160° C									
1	Absolut encoder	&R Elektronic						**08140000466**	**1**	**T**
	Type: CEV 65M / 110-01460 (with Profibus), (shaft Ø 10mm)									
4	Hex. screw	933	8.8	M10 x 40		galvd		**01013100408**	**4**	**T**
4	Conical spring washer	6796	FSt	10				**01340010010**	**4**	**T**

Stck	Benennung	DIN	Werkstoff	Abmessung	Länge	Obfl	Pos.	EDV-Nr.	Menge	T
Qty.	Designation	Manufacturer	Material	Dimensions	Length	Surf.		Code No.	Qty.	EK
			Order No.	mm	mm	RAL				F
4	Hex. nut	934	8	M10				**01408100010**	**4**	**T**
1	Worm gear	Bonfiglioli							**1**	**EK**
	Type:W86 U 46 P90 B5 B3									
	cover on both sides, however motor flange Ø 200 mm									
	with 4 bores Ø12, pitch circle Ø 165 mm,									
	gear box input designed for installation of standard motor, size 90,									
	type B5, motor shaft Ø24 life-time lubricated									
	transmission i = 46 (n2 = 30.4 min-1)									
	(without torque arm)									
1	Torque arm							**4184100300**	**1**	**F**
4	Hex. socket head cap screw	912	8.8	M10 x 25		galvd		**01001100260**	**4**	**T**
4	Conical spring washer	6796	FSt	10				**01340010010**	**4**	**T**
1	Feather key	6885		A10 x 8	100			**1631108630**	**1**	**T**
4	NTN- pedestal bearing	Type: UCP 207						**01563910350**	**4**	**T**
8	Hex. socket head cap screw	912	8.8	M16 x 40				**01001160400**	**8**	**T**
8	Locking washer	Schnorr		S16				**01223017160**	**8**	**T**
1	Shaft							**4540017752**	**1**	**F**
1	Shaft							**4540017753**	**1**	**F**
2	Safety ring	471		35 x 1,5					**2**	**EK**
4	Sprocket	(do = 98,14 mm; z = 12; t = 25,4 mm)						**4184100600**	**4**	**T**
2	Feather key	6885		A10 x 8	63			**01631108630**	**2**	**T**
4	Hex. socket head cap screw	912		M8 x 25				**01001080268**	**4**	**T**
2	Single roller chain t = 25,4;	8187							**2**	**EK**
	210 chain links									
	inner links on both sides									
4	1" connecting link, straight								**4**	**EK**
4	Threaded bolt							**4184012900**	**4**	**T**
8	Hex. nut	934	8	M16		galvd		**01408160002**	**8**	**T**
	Energy chain support									
1	Support bracket	welded part				7038		**4540017663**	**1**	**F**
2	Hex. socket head cap screw	912	8.8	M8 x 20		galvd		**01001080210**	**2**	**T**
2	Conical spring washer	6796	FSt	8				**01340008010**	**2**	**T**
1	Support bracket	welded part				7038		**4540017664**	**1**	**F**
2	Hex. socket head cap screw	912	8.8	M8 x 20		galvd		**01001080210**	**2**	**T**

Stck	Benennung	DIN	Werkstoff	Abmessung	Länge	Obfl	Pos.	EDV-Nr.	Menge	T
Qty.	Designation	Manufacturer	Material	Dimensions	Length	Surf.		Code No.	Qty.	EK
			Order No.	mm	mm	RAL				F
2	Conical spring washer	6796	FSt	8				**01340008010**	**2**	**T**
1	Energy chain (made of plastic)								**1**	**EK**
	Kabelschlepp Type: 0625.40 with one stay									
	fixed end and moving end connection, vertically suspended,									
	bending radius KR = 125 mm,									
	chain length LK = 2250 mm									
8	Hex. socket head cap screw	912	8.8	M8 x 20		galvd		**01001080210**	**8**	**T**
8	Hex. nut	934	8	M8		galvd		**01408080014**	**8**	**T**
	Chain cover									
4	Cover plate					7038		**4540017694**	**4**	**F**
14	Fillister head screw	7985	4.8	M6 x 12		galvd		**01048060130**	**14**	**T**
2	Cover plate					7038		**4540017695**	**2**	**F**
10	Fillister head screw	7985	4.8	M6 x 12		galvd		**01048060130**	**10**	**T**
2	Cover plate					7038		**4540017739**	**2**	**F**
10	Fillister head screw	7985	4.8	M6 x 12		galvd		**01048060130**	**10**	**T**
2	Chain protection					7038		**4540006579**	**2**	**F**
	Limit switching									
1	C-Profile					7038		**4540006420**	**1**	**F**
2	Hex. socket head cap screw	912	8.8	M6 x 10		galvd		**01003060110**	**2**	**T**
1	C-Profile					7038		**4540006577**	**1**	**F**
2	Hex. socket head cap screw	912	8.8	M6 x 10		galvd		**01003060110**	**2**	**T**
2	Bracket					7038		**4184103200**	**2**	**F**
	Angled steel	1028	USt37-2	60x8	40			**0601060083**		
2	Clamping piece					7038		**4184103300**	**2**	**F**
	Flat steel	174	St37k	25x6	40			**0011025060**		
4	Hex. screw	933	8.8	M6 x 20				**01013060205**	**4**	**T**
4	Conical spring washer	6796	FSt	6				**01340006010**	**4**	**T**
	E-box mounting bracket at the frame									
2	Support					7038		**4184102800**	**2**	**F**

Stck	Benennung	DIN	Werkstoff	Abmessung	Länge	Obfl	Pos.	EDV-Nr.	Menge	T
Qty.	Designation	Manufacturer	Material	Dimensions	Length	Surf.		Code No.	Qty.	EK
			Order No.	mm	mm	RAL				F
	FI-steel	174	St37k	40x8	1120			**0011040082**		
4	Counter-sunk head screw	7991	8.8	M6 x 12		galvd		**01005060132**	**4**	**T**
1	C-Profile					7038		**4184116100**	**1**	**F**
	C-Profile		St37	35/18/16x2	1100			**0670035180**		
2	Hex. socket head cap screw	912	8.8	M8 x 16		galvd		**01001080170**	**2**	**T**
2	Conical spring washer	6796	FSt	8				**01340008010**	**2**	**T**
	Carriage lifting-lowering - horizontal carriage							**4547001173**		
1	Carriage lifting-lowering	welded part				7038		**4540017633**	**1**	**F**
4	Bearing	welded part				7038		**4540000320**	**4**	**F**
8	Hex. screw	933	8.8	M16 x 40		galvd		**01013160401**	**8**	**T**
8	Conical spring washer	6796	FSt	16				**01340016010**	**8**	**T**
4	Mounting plate	Winkel	AP 0 Winkel-Nr. 212.003.000						**4**	**EK**
8	Spacer plate	Winkel		DS-0-1,0				**01598001010**	**8**	**T**
16	Hex. socket head cap screw	912	8.8	M10 x 30		galvd		**01001100319**	**16**	**T**
16	Conical spring washer	6796	FSt	10				**01340010010**	**16**	**T**
1	Travelling rail, right					7038		**4540017665**	**1**	**F**
1	Travelling rail, left					7038		**4540017666**	**1**	**F**
1	Plate					7038		**4540017667**	**1**	**F**
1	Plate					7038		**4540017668**	**1**	**F**
1	Plate					7038		**4540017669**	**1**	**F**
12	Hex. socket head cap screw	912	8.8	M8 x 20		galvd		**01001080210**	**12**	**T**
12	Conical spring washer	6796	FSt	8				**01340008010**	**12**	**T**
1	Chain tray					7038		**4540017689**	**1**	**F**
2	Hex. socket head cap screw	912	8.8	M8 x 20		galvd		**01001080210**	**2**	**T**
2	Conical spring washer	6796	FSt	8				**01340008010**	**2**	**T**
1	Energy chain (made of plastic)								**1**	**EK**
	IGUS Type: E300.075.100.0; 11 links									
	fixed and moving end connection (complete kit 3075. 12PZB)									
	bending radius KR = 100 mm; chain length LK = 737 mm									
2	Hex. socket head cap screw	912	8.8	M8 x 16		galvd		**01001080170**	**2**	**T**
2	Hex. socket head cap screw	912	8.8	M8 x 25		galvd		**01001080268**	**2**	**T**
4	Conical spring washer	6796	FSt	8				**01340008010**	**4**	**T**
2	Support	welded part				7038		**4540009636**	**2**	**F**
4	Hex. screw	933	8.8	M8 x 30		galvd		**01013080302**	**4**	**T**
4	Conical spring washer	6796	FSt	8				**01340008010**	**4**	**T**

Stck	Benennung	DIN	Werkstoff	Abmessung	Länge	Obfl	Pos.	EDV-Nr.	Menge	T
Qty.	Designation	Manufacturer	Material	Dimensions	Length	Surf.		Code No.	Qty.	EK
			Order No.	mm	mm	RAL				F
4	Hex. nut	934	8	M8				**01408080014**	**4**	**T**
1	Pneumatic cylinder	Festo							**1**	**EK**
	DNC-50-300-PPV-A									
1	Clevis SG-M16x1,5	Festo		6146				**991100000**	**1**	**T**
1	Trunnion mounting kit	Festo		163527					**1**	**EK**
	ZNCM-50									
2	Proximity switch	Festo		175484				**09940175484**	**2**	**T**
	SMT-8-PS-S-LED-24-B									
2	Socket with cable 5m	Festo		159421				**9940159421**	**2**	**T**
	SIM-M8-3GD-5-PU									
2	One-way flow control valve	Festo		151172					**2**	**EK**
	GRLA-1/4-QS-8-RS-B									
1	E-box mounting bracket 380 x 380					7038		**4540017670**	**1**	**F**
3	Hex. socket head cap screw	912	8.8	M6 x 16		galvd		**01001060170**	**3**	**T**
3	Conical spring washer	6796	FSt	6				**01340006010**	**3**	**T**
	Head support									
1	Head support bracket	welded part				7038		**4540017658**	**1**	**F**
8	Hex. socket head cap screw	912	8.8	M8 x 20		galvd		**01001080210**	**8**	**T**
4	Hex. socket head cap screw	912	8.8	M8 x 25		galvd		**01001080268**	**4**	**T**
12	Conical spring washer	6796	FSt	8				**01340008010**	**12**	**T**
1	Mounting, head sensors	welded part				7038		**4540017686**	**1**	**F**
1	Mounting, head sensors					7038		**4540017688**	**1**	**F**
4	Hex. socket head cap screw	912	´8.8	M6 x 16		galvd		**01001060170**	**4**	**T**
4	Conical spring washer	6796	FSt	6		galvd		**01340006010**	**4**	**T**
2	Hex. socket head cap screw	912	´8.8	M8 x 16		galvd		**01001080170**	**2**	**T**
2	Conical spring washer	6796	FSt	8		galvd		**01340008010**	**2**	**T**
2	Hex. socket head cap screw	912	´8.8	M8 x 25		galvd		**01001080268**	**2**	**T**
	Mechanical locking									
1	Bearing					7038		**4540006417**	**1**	**F**
4	Hex. screw	933	8.8	M12 x 30				**01013120305**	**4**	**T**
4	Conical spring washer	6796	FSt	12				**01340012010**	**4**	**T**
1	Lock					7038		**4540006418**	**1**	**F**
1	Bolt					br		**4540006404**	**1**	**T**
1	Hex. socket head cap screw	912	8.8	M8 x 45		galvd		**01001080460**	**1**	**T**
1	Locking bolt					br		**4540006402**	**1**	**T**

Stck	Benennung	DIN	Werkstoff	Abmessung	Länge	Obfl	Pos.	EDV-Nr.	Menge	T
Qty.	Designation	Manufacturer	Material	Dimensions	Length	Surf.		Code No.	Qty.	EK
			Order No.	mm	mm	RAL				F
1	Knotted chain - 2.5	5686		500 mm		galvd		**01922100251**	**1**	**T**
	Pneumatic accessories				**Pneumatic plan**			**4545000387**		
1	Air service unit	Festo		531030			1		**1**	**EK**
	MSB6-1/2: C4: J2: F1: D4: F3-WP									
1	Blank plug B-1/2	Festo		3571					**1**	**EK**
1	Angled socket PEV-1/4-WD-LED-24	Festo		164274					**1**	**EK**
1	Plug socket MSSD-EB	Festo		151687					**1**	**EK**
1	Illum. seal MEB-LD-12-24DC	Festo		151717					**1**	**EK**
1	Spiral-wound tube PPS-6-7,5-1/4-BL	Festo		19796			19		**1**	**EK**
1	Air gun LBP-1/4	Festo		35528			20	**9942091000**	**1**	**T**
1	Air nozzle LPZ-RB-150	Festo		184319				**9942091010**	**1**	**T**
2	Solenoid valve CPE18-M1H-5/3G-1/4	Festo		170247			2		**2**	**EK**
4	Socket cable KMEB-1-24-5-LED	Festo		151689			3	**08849903871**	**4**	**T**
4	Silencer U-1/4	Festo		2316			4		**4**	**EK**
1	Starting valve HEE-1/2-MIDI-24	Festo		172944			12		**1**	**EK**
1	Silencer U-1/2	Festo		2310			13		**1**	**EK**
1	Pressure switch PEV-1/4-SC-OD	Festo		161760			14		**1**	**EK**
1	Angled socket PEV-1/4-WD-LED-24	Festo		164274					**1**	**EK**
1	Air oiler LOE-D-MIDI	Festo		192576			21		**1**	**EK**
1	Mounting bracket HFOE-D-MIDI/MAXI	Festo		159593			21		**1**	**EK**
	Strap feed VS11-H									
1	Roller support	welded part				7038		**4540017673**	**1**	**F**
4	Hex. socket head cap screw	912	8.8	M8 x 30		galvd		**01001080318**	**4**	**T**
4	Conical spring washer	6796	FSt	8				**01340008010**	**4**	**T**
1	Roller support					7038		**4540017742**	**1**	**F**
1	Roller support					7038		**4540017743**	**1**	**F**
4	Hex. socket head cap screw	912	8.8	M8 x 20		galvd		**01001080210**	**4**	**T**
4	Conical spring washer	6796	FSt	8				**01340008010**	**4**	**T**
6	Bush					galvd		**4540017671**	**6**	
3	Tension roller	INA		RSR.B13.159.LO		7038		**1594104830**	**3**	

Stck	Benennung	DIN	Werkstoff	Abmessung	Länge	Obfl	Pos.	EDV-Nr.	Menge	T
Qty.	Designation	Manufacturer	Material	Dimensions	Length	Surf.		Code No.	Qty.	EK
			Order No.	mm	mm	RAL				F
3	Hex. socket head cap screw	912	8.8	M12x80		galvd		**1001120805**	**3**	
5	Conical spring washer	6796	FSt	12		A4A		**1340012010**	**5**	
2	Hex. nut	934	8	M12		galvd		**1408120008**	**2**	
6	Grooved ball bearing	625	SKF	6301-2Z				**1501630103**	**6**	
3	Plate					7038		**4540017672**	**3**	
3	Bush					galvd		**4540009846**	**3**	
3	Hex. socket head cap screw	912	8.8	M12x60		galvd		**1001120610**	**3**	
3	Conical spring washer	6796	FSt	12		A4A		**1340012010**	**3**	
3	Hex. nut	934	8	M12		galvd		**1408120008**	**3**	
	Pneum. strap clamp									
1	Strap clamping mounting					7038		**4540017744**	**1**	**F**
4	Hex. socket head cap screw	912	8.8	M8 x 20		galvd		**01001080210**	**4**	**T**
4	Conical spring washer	6796	FSt	8				**01340008010**	**4**	**T**
4	Hex. socket head cap screw	912	8.8	M5 x 16		galvd		**01001050138**	**4**	**T**
4	Washer	125		B 5.3		galvd		**01302053010**	**4**	**T**
1	Pressure spring	Gutekunst		D-252A-30				**1620002521**	**1**	**T**
1	Compact cylinder ADVU-40-10-P-A-S2	Festo		156015				**9940156015**	**1**	**T**
1	Solenoid valve CPE14-M1BH-3GL-1/8 24V DC	Festo		196929				**9942000120**	**1**	**T**
2	Silencer UC-1/8	Festo		161419				**9942400025**	**2**	**T**
1	Socket cable KMYZ-9-4-5-LED-PUR-B			193689				**09942000139**	**1**	**T**
1	Screw	TITAN						**5802.0017.0**	**1**	**T**
1	Cover		1.0037			galvd		**4540009608**	**1**	**T**
4	Hex. socket head cap screw	912	8.8	M6x60		galvd		**01001060610**	**4**	**T**
4	Washer	125		B 6.4		galvd		**01302064010**	**4**	**T**
1	Top part		1.0037			galvd		**4540009609**	**1**	**T**
1	Bottom part		1.0037			galvd		**4540009610**	**1**	**T**
4	Hex. socket head cap screw	912	8.8	M6x40		galvd		**01001060410**	**4**	**T**
1	Intermediate piece		1.0037			galvd		**4540009611**	**1**	**T**
1	Spring set		1.0037			br		**4540009612**	**1**	**T**

Stck	Benennung	DIN	Werkstoff	Abmessung	Länge	Obfl	Pos.	EDV-Nr.	Menge	T
Qty.	Designation	Manufacturer	Material	Dimensions	Length	Surf.		Code No.	Qty.	EK
			Order No.	mm	mm	RAL				F
	Strap guide channel							**4547001172**		
1	Channel frame	welded part				7038		**4540017697**	**1**	**F**
1	Bracket, right					7038		**4184104400**	**1**	**F**
	Angled steel	1029	USt37-2	120x80x10	100			**0601120100**		
1	Bracket, left					7038		**4184104500**	**1**	**F**
	Angled steel	1028	USt37-2	120x80x10	100			**0601120100**		
4	Hex. screw	933	8.8	M12 x 25		galvd		**01013120255**	**4**	**T**
4	Conical spring washer	6796	FSt	12				**01340012010**	**4**	**T**
8	Hex. screw	933	8.8	M8 x 25		galvd		**01001080268**	**8**	**T**
8	Conical spring washer	6796	FSt	8				**01340008010**	**8**	**T**
1	Tube	welded part				7038		**4540017745**	**1**	**F**
2	Strut, consisting of:					7038		**4518013080**	**2**	**F**
2	Pos. 1 Fl-steel	174	St37K	50x10	440			**0011050101**		
1	Pos. 2 turnbuckle	1480		A M16x170						
4	Hex. socket head cap screw	912	8.8	M12 x 30		galvd		**01001120301**	**4**	**T**
4	Conical spring washer	6796	FSt	12				**01340012010**	**4**	**T**
2	Hex. nut	934	8	M12				**01408120008**	**2**	**T**
4	Channel corner					7038		**4540017711**	**4**	**F**
1	Channel back 25-465					7038		**4540017713**	**1**	**F**
2	Channel back 25-1430					7038		**4540017714**	**2**	**F**
1	Channel back 25-1615					7038		**4540017715**	**1**	**F**
1	Channel back 25-565					7038		**4540017718**	**1**	**F**
34	Hex. socket head cap screw	912	`8.8	M8 x 20		galvd		**01001080210**	**34**	**T**
34	Conical spring washer	6796	FSt	8				**01340008010**	**34**	**T**
1	Channel plate 50-455		V2A	t=2				**4540017719**	**1**	**T**
2	Channel plate 50-1420		V2A	t=2				**4540017720**	**2**	**T**
1	Channel plate 50-1615		V2A	t=2				**4540017721**	**1**	**T**
1	Channel plate 50-555		V2A	t=2				**4540017722**	**1**	**T**
4	Curved plate, top		V2A	t=2				**4540017728**	**4**	**T**
4	Curved plate, bottom		V2A	t=2				**4540017730**	**4**	**T**
1	Channel flap 455		V2A	t=1,5				**4540017706**	**1**	**T**
6	Channel flap 470		V2A	t=1,5				**4540017708**	**6**	**T**
4	Channel flap 400		V2A	t=1,5				**4540017709**	**4**	**T**
1	Channel flap 555		V2A	t=1,5				**4540017710**	**1**	**T**

Stck	Benennung	DIN	Werkstoff	Abmessung	Länge	Obfl	Pos.	EDV-Nr.	Menge	T
Qty.	Designation	Manufacturer	Material	Dimensions	Length	Surf.		Code No.	Qty.	EK
			Order No.	mm	mm	RAL				F
8	Hex. socket head cap screw	912	´8.8	M5 x 35		galvd		**1001050360**	**8**	**T**
24	Hex. socket head cap screw	912	8.8	M5 x 50		galvd		**1001050510**	**24**	**T**
24	Conical spring			0,9				**3080400601**	**24**	**T**
32	Hex. nut, self-locking	985	8	M5		galvd		**1495050016**	**32**	**T**
	Strap guide arms									
2	pneum. linear drive	Festo		532446					**2**	**EK**
	DGC-18-300-GF-PPV-A									
2	Foot mounting	Festo		533667					**2**	**EK**
	HPC-18									
4	Proximity switch	Festo		574334					**4**	**EK**
	SMT-8M-A-PS-24V-E-0,3-M8D									
4	Socket with cable 5m	Festo		159421				**994015942**	**4**	**T**
	SIM-M8-3GD-5-PU									
4	One-way flow control valve	Festo		151172					**4**	**EK**
	GRLA-1/4-QS-8-RS-B									
2	Plate	welded part				7038		**4540017751**	**2**	**F**
4	Hex. socket head cap screw	912	´8.8	M5 x 18		galvd		**1001050183**	**4**	**T**
4	Conical spring washer	6796	FSt	5				**1340005010**	**4**	**T**
1	Strap guide arm, top	welded part				galvd		**4540017698**	**1**	**F**
2	Hex. nut	934	8	M8		galvd		**1408080014**	**2**	**T**
2	Hex. nut	439	8	M8		galvd		**1401080010**	**2**	**T**
2	Scheibe	125	St	B 8,4		galvd		**1302084010**	**2**	**T**
1	Strap guide arm, bottom	welded part				galvd		**4540017700**	**1**	**F**
4	Hex. socket head cap screw	912	´8.8	M5 x 16		galvd		**1001050174**	**4**	**T**
4	Conical spring washer	6796	FSt	5				**1340005010**	**4**	**T**
	Strap guide channel monitoring									
2	Photocell holder, 1 pc. consisting of:					7038		**4184108100**	**2**	**F**
1	Pos. 1 Fl-steel	174	St37K	80x8	280			**0011080080**		
1	Pos. 2 Fl-steel	174	St37K	60x8	155			**0011060084**		
2	Mirror holder, consisting of					7038		**4184108200**	**2**	**F**
1	Pos. 1 Fl-steel	174	St37K	40x8	300			**0011040082**		
1	Pos. 2 Fl-steel	174	St37K	40x8	170			**0011040082**		
1	Photocell holder, 1 pc. consisting of:					7038		**4184108300**	**1**	**F**
1	Pos. 1 Fl-steel	174	St37K	80x8	90			**0011080080**		
1	Pos. 2 Fl-steel	174	St37K	90x6	165			**0011090060**		
1	Mirror holder, consisting of					7038		**4184108400**	**1**	**F**
1	Pos. 1 Fl-steel	174	St37K	40x8	85			**0011040082**		
1	Pos. 2 Fl-steel	174	St37K	40x8	160			**0011040082**		

Stck	Benennung	DIN	Werkstoff	Abmessung	Länge	Obfl	Pos.	EDV-Nr.	Menge	T
Qty.	Designation	Manufacturer	Material	Dimensions	Length	Surf.		Code No.	Qty.	EK
			Order No.	mm	mm	RAL				F
1	Photocell holder, 1 pc. consisting of:					7038		**4184114600**	**1**	**F**
1	Pos. 1 Fl-steel	174	St37K	40x6	185			**0011040064**		
1	Pos. 2 Fl-steel	174	St37K	80x6	100			**0011080068**		
1	Mirror holder, consisting of					7038		**4184114500**	**1**	**F**
1	Pos. 1 Fl-steel	174	St37K	40x6	85			**0011040064**		
1	Pos. 2 Fl-steel	174	St37K	40x6	220			**0011040064**		
16	Hex. screw	933	`8.8	M8x20		galvd		**01013080210**	**16**	**T**
16	Conical spring washer	6796	FSt	8		A4A		**01340008010**	**16**	**T**
6	Light barrier	Sick		WL33-01				**BINATEC**		
12	Hex. screw	933	8.8	M4x50		galvd			**12**	**R**
12	Conical spring washer	6796	FSt	4		A4A		**01340004010**	**12**	**T**
12	Hex. nut	934	8	M4		galvd		**01408040010**	**12**	**T**
6	Reflector	Sick		PL30				**BINATEC**		
12	Hex. socket head cap screw	912	8.8	M4x20		galvd		**01001040210**	**12**	**T**
12	Conical spring washer	6796	FSt	4		A4A		**01340004010**	**12**	**T**
12	Hex. nut	934	8	M4		galvd		**01408040010**	**12**	**T**

Proj.-Nr.: T13079
AB-Nr.: 14134839
Art.-Nr.: 76902174015

ERSATZ- UND VERSCHLEIßTEILLISTE
Spare part list VS11-H

454X001963_1_00000.xls 26.11.2013
Kunde: Möllers

Lfd-Nr. / Serial-No.	Zeichnungs.-Nr. / Drawing No.	Benennung / Abmessung / Type / Designation / Dimension / Type	Hersteller / Manufacturer	Kategorie*) / Code*)	Gesamtanzahl / Total Quant.	Lagervorschl. Rec. Stock 12 Mon.	Lagervorschl. Rec. Stock 24 Mon.	Time of delivery / weeks	Preis / Price €/Stück/Pieces
		Umreifungskopf VS11-L	Siehe auch Ersatzteilliste VS11-L [E02-11 DE 06/13]						
		Strapping head VS11-L	See also spare part list VS11-L [E02-11 DE 06/13]						
1	010002 - 11	Passfeder/feather key DIN 6885 - 8x7x25		V	1	2	4	3	
2	010002 - 12	Stützscheibe/supporting disc DIN988 - S28x40x2		V	1	2	4	3	
3	010002 - 13	Axialscheibe/axial disc AS 3047		V	2	2	4	3	
4	010002 - 24	Spannrad/tensioning wheel	TITAN	V	1	2	4	3	
5	010002 - 32	Passfeder/feather key DIN 6885 - A6x6x25		V	1	2	4	3	
6	010002 - 33	Stützscheibe / supporting disc DIN 988 - 20x28x2		V	2	4	6	3	
7	010002 - 34	Sicherungsscheibe/lock washer DIN 6799 - 15		V	1	2	4	3	
8	010002 - 42	Transportrolle/conveying roller	TITAN	V	1	2	4	3	
9	010002 - 54	Stützrolle/supporting roller	TITAN	V	1	2	4	3	
10	010002 - 58	Axialscheibe/axial disc AS 2542		V	1	2	4	3	
11	010002 - 59	Sicherungsscheibe/lock washer DIN 6799 - 19		V	1	2	4	3	
12	010002 - 62	Laufrolle/roller		V	1	2	4	3	
13	010002 - 63	Stützscheibe/supporting disc DIN 988 - S17x24		V	1	2	4	3	
14	010002 - 64	Sicherungsscheibe/lock washer DIN 6799 - 15		V	1	2	4	3	
15	010002 - 111	Seitenführung, rechts hinten/side guidance, right, back	TITAN	E	1			3	
16	010002 - 119	Seitenführung, links hinten/side guidance, left, back	TITAN	E	1			3	
17	010002 - 122	Seitenführung, vorn/side guidance front	TITAN	E	1			3	
18	010002 - 135	Laufrolle FG 619 EE/roller		E	2			3	
19	010002 - 174	Näherungsschalter/proximity switch		E	2			3	
20	010002 - 177	Seitenführung/side guidance		E	1			3	

Kategorie*)
V=Verschleißteil
E=Ersatzteil

ERSATZ- UND VERSCHLEIßTEILLISTE
Spare part list VS11-H

Lfd-Nr. / Serial-No.	Zeichnungs.-Nr. / Drawing No.	Benennung / Abmessung / Type / Designation / Dimension / Type	Hersteller / Manufacturer	Kategorie*) / Code*)	Gesamtanzahl / Total Quant.	Lagervorschl. Rec. Stock 12 Mon.	Lagervorschl. Rec. Stock 24 Mon.	Time of delivery / weeks	Preis / Price €/Stück/Pieces
21	010002 - 180	Kanalklappe, links/channel flap, left		V	1	2	4	3	
22	010002 - 188	Kanalklappe, rechts hinten/channel flap, back right	TITAN	V	1	2	4	3	
23	010002 - 181	Federschraube/Spring bolt	TITAN	V	2	4	8	4	
24	010002 - 184	Kanalklappe, rechts vorn/channel flap, right front	TITAN	V	1	2	4	3	
25	010002 - 185	Federschraube/Spring bolt	TITAN	V	2	4	8	4	
26	010002 - 186	Kegelfeder/conical wire spring	TITAN	V	2	4	8	4	
27	010002 - 187	Sechskantmutter M5 DIN985/Hex. nut		V	2	4	8	3	
28	010002 - 189	Federschraube/Spring bolt	TITAN	E	2			3	
29	010002 - 344	Zylinderschraube/Hex. socket head cap screw ISO 4762-M8x	TITAN	V	4	4	8	4	
30	010002 - 345	Sicherungsscheibe/Locking washer		V	4	4	8	4	
31	010002 - 346	Welle/Shaft	TITAN	E	1			3	
32	010002 - 383	Kanalklappe, rechts/channel flap, right	TITAN	V	1	2	4	3	
33	010002 - 384	Kanalklappe, links/channel flap, left	TITAN	V	1	2	4	3	
34	010002 - 385	Federschraube/Spring bolt	TITAN	V	4	4	8	3	
35	010002 - 386	Kegelfeder/conical wire spring	TITAN	V	4	4	8	3	
36	010002 - 420	DIN913 - M5x8	TITAN	E	1			3	
37	010002 - 421	Zylinderschraube/Hex. socket head cap screw ISO 4762-M6x	TITAN	V	2	4	8	4	
38	010002 - 422	Sicherungsscheibe/Locking washer		V	2	4	8	3	
39	010002 - 435	Untermesser, rechts/lower cutter, right	TITAN	E	1			3	
40	010002 - 436	Untermesser, links/lower cutter, left	TITAN	E	1			3	
41	010002 - 438	Obermesser, links/upper cutter, left	TITAN	E	1			3	
42	010002 - 440	Obermesser, rechts/upper cutter, right	TITAN	E	1			3	

Kategorie*)
V=Verschleißteil
E=Ersatzteil

Proj.-Nr.: T13079
AB-Nr.: 14134839
Art.-Nr.: 76902174015

ERSATZ- UND VERSCHLEIßTEILLISTE
Spare part list VS11-H

454X001963_1_00000.xls 26.11.2013
Kunde: Möllers

Lfd-Nr. / Serial-No.	Zeichnungs.-Nr. / Drawing No.	Benennung / Abmessung / Type / Designation / Dimension / Type	Hersteller / Manufacturer	Kategorie*) / Code*)	Gesamtanzahl / Total Quant.	Lagervorschl. Rec. Stock 12 Mon.	Lagervorschl. Rec. Stock 24 Mon.	Time of delivery / weeks	Preis / Price €/Stück/Pieces
43	010002 - 443	Abschneidmesser/Cutter	TITAN	V	1	2	4	3	
44	010002 - 445	Klemmesser, links/clamping cutter, left	TITAN	V	1	2	4	3	
45	010002 - 446	Klemmesser, rechts/clamping cutter, right	TITAN	V	1	2	4	3	
46	010002 - 454	Zylinderschraube/Hex. socket head cap screw ISO 4762-M6x	TITAN	V	2	4	8	4	
47	010002 - 458	Gegenmesser/countercutter	TITAN	V	1	2	4	3	
48	010002 - 531	Messerpaket 16mm komplett/cutter package 16mm complete	TITAN	V	1	2	4	3	
49	010002 - 1042	Klemmführung 13mm/clamp guidance 16mm	TITAN	V	1	2	4	3	
50	010002 - 1092	Klemmesser, links 16mm/clamping cutter, left	TITAN	V	1	2	4	3	
51	010002 - 1102	Klemmesser, rechts 16mm/clamping cutter, right	TITAN	V	1	2	4	3	
	4547000574	**Bandklemme, pneumatisch/Pneum. strap clamp**							
	4545000297	Pneumatic plan							
52	09940156015	Pneumatic cylinder ADVU-40-10-P-A-S2	FESTO	E	1			4	
53	9942000120	Magnetventil/Solenoid valve CPE14-M1BH-3GL-1/8	FESTO	E	1			4	
54		Steckdose/Socket cable KMYZ-9-24-5-LED-PUR-B	FESTO	E	1			4	
55	9942400025	Schalldämpfer/Silencer UC-1/8	FESTO	E	1			4	

Kategorie*)
V=Verschleißteil
E=Ersatzteil

ERSATZ- UND VERSCHLEIßTEILLISTE
Spare part list VS11-H

Lfd-Nr. / Serial-No.	Zeichnungs.-Nr. / Drawing No.	Benennung / Abmessung / Type / Designation / Dimension / Type	Hersteller / Manufacturer	Kategorie*) / Code*)	Gesamtanzahl / Total Quant.	Lagervorschl. / Rec. Stock 12 Mon.	Lagervorschl. / Rec. Stock 24 Mon.	Time of delivery / weeks	Preis / Price €/Stück/Pieces
		Bandzuführung/Strap feed							
56	1594104830	Spannrolle/Tension roller RSR.B.16.159.LO	TITAN	V	2	2	4	3	
57	1501630103	Rillenkugellager/Grooved ball bearing 6301-2Z	SKF	E	6			3	
	4547001179	**Maschinenständer/Machine frame**							
58		Drehstrombremsmotor/Brake motor	EW-EURODRI	E	1			6 - 8	
		DRE90L4BE2/FF/TF/XV2A/Z/DH							
59		Absolutwertgeber/Absolut decoder CEV 65M / 110-01460	T&R Electroni	E	1			4	
60		Schneckengetriebe/Worm gear W86 U46 P90 B5 B3	Bonfiglioli	E	1			4	
61	1563910350	Stehlager/Pedestal bearing Type UCP 207	NTN	E	1			3	
62	4184100600	Kettenrad/Spracket	TITAN	E	4			3	
63		Einfach-Rollenkette/Single roller chain DIN 8187	THF	E	2			3	
		210 Glieder/Chain links, t=25,4							

Kategorie*)
V=Verschleißteil
E=Ersatzteil

Proj.-Nr.: T13079
AB-Nr.: 14134839
Art.-Nr.: 76902174015

ERSATZ- UND VERSCHLEIßTEILLISTE
Spare part list VS11-H

454X001963_1_00000.xls 26.11.2013
Kunde: Möllers

Lfd-Nr. / Serial-No.	Zeichnungs.-Nr. / Drawing No.	Benennung / Abmessung / Type / Designation / Dimension / Type	Hersteller / Manufacturer	Kategorie*) / Code*)	Gesamtanzahl / Total Quant.	Lagervorschl. / Rec. Stock 12 Mon.	Lagervorschl. / Rec. Stock 24 Mon.	Time of delivery / weeks	Preis / Price €/Stück/Pieces
	4547001173	**Hubschlitten/Carriage lifting-lowering**							
64	4540000320	Lager/bearing	TITAN	E	4			3	
65		Anschraubplatte/Mounting plate AP0 no.212.003.000	Winkel	E	4			3	
66		Pneumatic cylinder DNC-50-300-PPV-A	FESTO	E	1			4	
67		Näherungsschalter/Proximity switch SMT-8-PS-S-LED-24-B	FESTO	E	2			4	
68		Steckdose mit Kabel/Socket with cable SIM-M8-3GD-5-PU	FESTO	E	2			4	
69		Drossel-Rückschlagventil/One-way flow control valve	FESTO	E	2			4	
		GRLA-1/4-QS-8-RS-B							

Kategorie*)
V=Verschleißteil
E=Ersatzteil

ERSATZ- UND VERSCHLEIßTEILLISTE
Spare part list VS11-H

Lfd-Nr. / Serial-No.	Zeichnungs.-Nr. / Drawing No.	Benennung / Abmessung / Type / Designation / Dimension / Type	Hersteller / Manufacturer	Kategorie*) / Code*)	Gesamtanzahl / Total Quant.	Lagervorschl. Rec. Stock 12 Mon.	Lagervorschl. Rec. Stock 24 Mon.	Time of delivery / weeks	Preis / Price €/Stück/Pieces
	4547001172	**Kanalsystem/Strap guide channel**							
70	4540017711	Kanalbogen/Channel corner	TITAN	E	4			3	
71	4540017713	Kanalrücken/Channel back	TITAN	E	1			3	
72	4540017714	Kanalrücken/Channel back	TITAN	E	2			3	
73	4540017715	Kanalrücken/Channel back	TITAN	E	1			3	
74	4540017716	Kanalrücken/Channel back	TITAN	E	1			3	
75	4540017719	Kanalblech/Channel plate	TITAN	V	1	1	2	3	
76	4540017720	Kanalblech/Channel plate	TITAN	V	2	2	4	3	
77	4540017721	Kanalblech/Channel plate	TITAN	V	1	1	2	3	
78	4540017722	Kanalblech/Channel plate	TITAN	V	1	1	2	3	
79	4540017728	Bogenblech/Curved plate	TITAN	V	4	4	8	3	
80	4540017730	Bogenblech/Curved plate	TITAN	V	4	4	8	3	
81	4540017706	Kanalklappe/Channel flap	TITAN	V	1	1	2	3	
82	4540017708	Kanalklappe/Channel flap	TITAN	V	6	6	12	3	
83	4540017709	Kanalklappe/Channel flap	TITAN	V	4	4	8	3	
84	4540017710	Kanalklappe/Channel flap	TITAN	V	1	1	2	3	
85		Zyl.schraube/Hex. socket head cap screw M5x50 DIN912,vz		V	24	24	48	3	
86	3080400601	Kegelfeder/Conical spring 0,9	TITAN	V	24	24	48	3	
87		Sechskantmutter, selbstsichernd/Hex. nut, self-locking		V	32	32	64	3	
		M5, DIN985							

Kategorie*)
V=Verschleißteil
E=Ersatzteil

ERSATZ- UND VERSCHLEIßTEILLISTE
Spare part list VS11-H

Lfd-Nr. / Serial-No.	Zeichnungs.-Nr. / Drawing No.	Benennung / Abmessung / Type / Designation / Dimension / Type	Hersteller / Manufacturer	Kategorie*) / Code*)	Gesamtanzahl / Total Quant.	Lagervorschl. / Rec. Stock 12 Mon.	Lagervorschl. / Rec. Stock 24 Mon.	Time of delivery / weeks	Preis / Price €/Stück/Pieces
	4547001172	**Bandfangarme/Strap guide arms**							
88		Linearantrieb/Pneum. linear drive DGC-18-300-GF-PPV-A	FESTO	E	2			4	
89		Näherungsschalter/Proximity switch SMT-8M-A-PS-24V-E-0,3	FESTO	E	4			4	
90	**994015942**	Steckdose SIM-M8-3GD-5-PU	FESTO	E	4			4	
91		Drossel-Rückschlagventil/One-way flow control valve	FESTO	E	4			4	
		GRLA-1/4-QS-8-RS-B							
	4545000387	**Pneumatikzubehör/Pneumatic accessories**							
92		Magnetventil/Solenoid valve CPE18-M1H-5/3G-1/4	FESTO	E	2			4	
93		Schalldämpfer/Silencer U-1/4	FESTO	E	4			4	
94		Steckdosenkabel/Socket cable KMEB-1-24-5-LED	FESTO	E	4			4	
95		Wartungsgeräte-Kombination/Air service unit	FESTO	E	1			4	
96		MSB6-1/2: C4: J2: F1: D4: F3-WP							
97		Einschaltventil/on-off valve HEE-1/2-MIDI-24	FESTO	E	1			4	

Kategorie*)
V=Verschleißteil
E=Ersatzteil

ERSATZ- UND VERSCHLEIßTEILLISTE
Spare part list VS11-H

Lfd-Nr. / Serial-No.	Zeichnungs.-Nr. / Drawing No.	Benennung / Abmessung / Type / Designation / Dimension / Type	Hersteller / Manufacturer	Kategorie*) / Code*)	Gesamtanzahl / Total Quant.	Lagervorschl. Rec. Stock 12 Mon.	Lagervorschl. Rec. Stock 24 Mon.	Time of delivery / weeks	Preis / Price €/Stück/Pieces
		Elektrik							
98	08260000005	Koppelrelais / Coupler relay	Finder	E	9	2	4	4	
99	08211000530	Induktiver Näherungsschalter / Inductive prox. switch	ifm electroni	E	1	1	1	4	
100	08300003030	Sicherheitsrelaisbaustein / Safety relay module	Schmersal K	E	2	1	1	4	
101	08300003031	Erweiterungsbaustein 24V DC / Extension module	Schmersal K	E	2	1	1	4	
102	08140000300	Redundanzmodul / Redundancy module	Murrelektron	E	1	1	1	4	
103	08770000125	Sicherungsmodul-4-Kanal / Safety module, 4-channel	Murrelektron	E	1	1	1	4	
104	08871066151	SCHUETZ, 3KW, 1OE / Contactor	Siemens	E	2	1	1	4	
105	08871066160	Entstoerdiode, DC12-250V / Interference suppression diode	Siemens	E	2	1	1	4	
106	08872000049	Leistungsschalter Bgr. S00 / Circuit breaker	Siemens	E	1	1	1	4	
107	08872000052	Leistungsschalter Bgr. S00 / Circuit breaker	Siemens	E	2	1	1	4	
108	08872000033	Leistungsschalter Bgr. S00 / Circuit breaker	Siemens	E	1	1	1	4	
109	08872000051	Leistungsschalter, Bgr. S0 / Circuit breaker	Siemens	E	1	1	1	4	
110	08332300740	Schaltelem. m. 1SCHLTGLD,1S,1P/ Switching element	Siemens	E	9	2	4	4	
111	08332300741	Schaltelement m. 1SCHLTGLD,1OE / Switching element	Siemens	E	2	1	1	4	
112	08332300773	Schaltelement Safety / Switching element "safety"	Siemens	E	3	1	2	4	
113	08332300771	Schwenkhebel f. Positionssch. / Slewing lever f. position switc	Siemens	E	2	1	1	4	
114	08310000148	Antriebskopf fr Positionssch./Actuator for position switch	Siemens	E	2	1	1	4	
115	08310000149	Basisschalter / Basic switch	Siemens	E	2	1	1	4	
116	08211000174	FI-Schutzschalter Typ A /Ground fault circuit interruptor	Siemens	E	1	1	1	4	
117	08211000148	Hilfsstromschalter /Control switch	Siemens	E	1	1	1	4	

Kategorie*)
V=Verschleißteil
E=Ersatzteil

Proj.-Nr.: T13079
AB-Nr.: 14134839
Art.-Nr.: 76902174015

ERSATZ- UND VERSCHLEIßTEILLISTE
Spare part list VS11-H

454X001963_1_00000.xls 26.11.2013
Kunde: Möllers

Lfd-Nr. / Serial-No.	Zeichnungs.-Nr. / Drawing No.	Benennung / Abmessung / Type / Designation / Dimension / Type	Hersteller / Manufacturer	Kategorie*) / Code*)	Gesamtanzahl / Total Quant.	Lagervorschl. Rec. Stock 12 Mon.	Lagervorschl. Rec. Stock 24 Mon.	Time of delivery / weeks	**Preis / Price €/Stück/Pieces**
118	08805001012	Hilfsstromschalter AS / Control switch	Siemens	E	1	1	1	4	
119	08211000097	Leitungsschutzschalter B10 / Circuit breaker	Siemens	E	1	1	1	4	
120	08140000066	OP177B DP Blue Mode STN-Display	Siemens	E	1	1	1	4	
121	08140000233	Gleichstromversorgung / DC supply	Siemens	E	2	1	1	4	
122	08140000136	Simatic S7-300 CPU315-2DP	Siemens	E	1	1	1	4	
123	08140000076	Simatic S7-300, Digitaleingabe / Digital input	Siemens	E	2	1	1	4	
124	08140000077	Simatic S7-300, Digitalausgabe / Digital output	Siemens	E	1	1	1	4	
125	08140000084	Simatic S7-300, Digitalbaugr. / Digital module	Siemens	E	1	1	1	4	
126	08140000078	Simatic S7-300, Digitalbaugrup / Digital module	Siemens	E	1	1	1	4	
127	08140000220	SIMATIC S7-300, Zählerbaugr. / Counter module	Siemens	E	1	1	1	4	
128	08140000079	Kommunikationsprozessor / Communication processor	Siemens	E	2	1	1	4	
129	08140000237	Gleichstromnetzteil Smart 5A 120-230V/24V / DC supply unit	Siemens	E	2	1	1	**4**	
.									

Kategorie*)
V=Verschleißteil
E=Ersatzteil

Umreifungskopf VS11-L
Strapping head VS11-L

Bandklemme
Vor - Zurück
Strap clamping unit
forward - backward

Bandführungsarme
Vor - Zurück
Strap positioning unit
forward - backward

Bandklemme
Vor - Zurück
Strap clamping unit
forward - backward

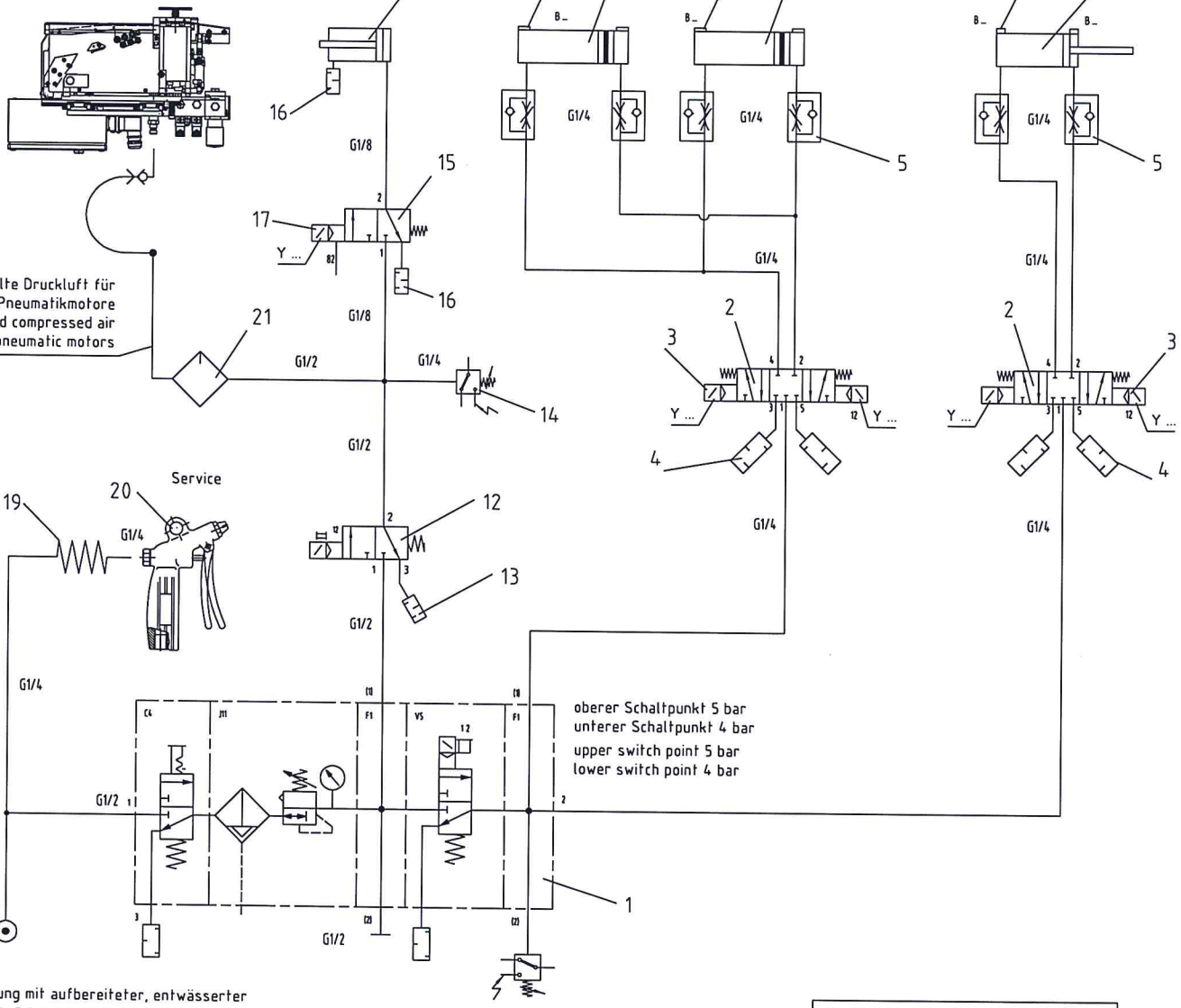

Versorgung mit aufbereiteter, entwässerter Druckluft 5,0 bar Fließdruck, bauseits Anschluß G1/2

Supply of pressed and dehydrated air, 5,0 bar flow pressure, by operating company Connection G1/2

Ventile: 24V, DC mit Handhilfsbetätigung
Solenoids: 24V, DC with hand-operation

Pos	Qty	Benennung/Designation	Manufact.
21	1	Druckluftöler 192576 LOE-D-MIDI Lubricator 192576 LOE-D-MIDI	Festo
	1	Befestigungswinkel 159593 HFOE-D-MIDI/MAXI Mounting bracket 159593 HFOE-D-MIDI/MAXI	Festo
20	1	Luftblaspistole 35528 LBP-1/4 Safety air gun 35528 LBP-1/4	Festo
	1	Blasdüse 184319 LPZ-RB-150 Blas nozzle 184319 LPZ-RB-150	Festo
19	1	Spiralschlauch 19796 PPS-6-7.5-1/4-BL Spiral plastic tubing 19796 PPS-6-7.5-1/4-BL	Festo
18	1	Kompaktzylinder 156015 ADVU-40-10-P-A-S2 Compact cylinder 156015 ADVU-40-10-P-A-S2	Festo
17	1	Steckdosenkabel 193689 KMYZ-9-4-5-LED-PUR-B Cable with socket 193689 KMYZ-9-4-5-LED-PUR-B	Festo
16	2	Schalldämpfer 161419 UC-1/8 Silencer 161419 UC-1/8	Festo
15	1	Magnetventil 196929 CPE14-M1BH-3GL-1/8 24V DC Solenoid valve196929 CPE14-M1BH-3GL-1/8 24V DC	Festo
14	1	Druckschalter 161760 PEV-1/4-SC-OD Pressure sensitive switch 161760 PEV-1/4-SC-OD	Festo
13	1	Schalldämpfer 2310 U-1/2 Silencer 2310 U-1/2	Festo
12	1	Einschaltventil 172944 HEE-1/2-MIDI-24 On/off valve 172944 HEE-1/2-MIDI-24	Festo
11	2	Steckdose mit Kabel 5m 159421 SIM-M8-3GD-5-PU Plug socket with cable 5m 159421 SIM-M8-3GD-5-PU	Festo
10	2	Näherungsschalter 175484 SMT-8-PS-S-LED-24-B Proximity switch 175484 SMT-8-PS-S-LED-24-B	Festo
9	1	Pneumatikzylinder DNC-50-300-PPV-A Pneumatic cylinder DNC-50-300-PPV-A	Festo
8	4	Steckdose mit Kabel 5m 159421 SIM-M8-3GD-5-PU Plug socket with cable 5m 159421 SIM-M8-3GD-5-PU	Festo
7	4	Näherungsschalter 574334 SMT-8-PS-LED-24-B Proximity switch 574334 SMT-8-PS-LED-24-B	Festo
6	2	Linearantrieb 532446 DGC-18-300-GF-PPV-A Rodless linear drive 532446 DGC-18-300-GF-PPV-A	Festo
5	6	Drossel-Rückschlagventil GRLA-1/4-QS-8-RS-B One-way flow control valve GRLA-1/4-QS-8-RS-B	Festo
4	4	Schalldämpfer 2316 U-1/4 Silencer 2316 U-1/4	Festo
3	4	Steckdosenkabel 151689 KMEB-1-24-5-LED Cable with socket 151689 KMEB-1-24-5-LED	Festo
2	2	Magnetventil 170247 CPE18-M1H-5/3G-1/4 Solenoid valve170247 CPE18-M1H-5/3G-1/4	Festo
1	1	Wartungseinheit 531030 MSB6-1/2:C4:J2:F1:D4:F3-WP Service unit 531030 MSB6-1/2:C4:J2:F1:D4:F3-WP	Festo

| | | |

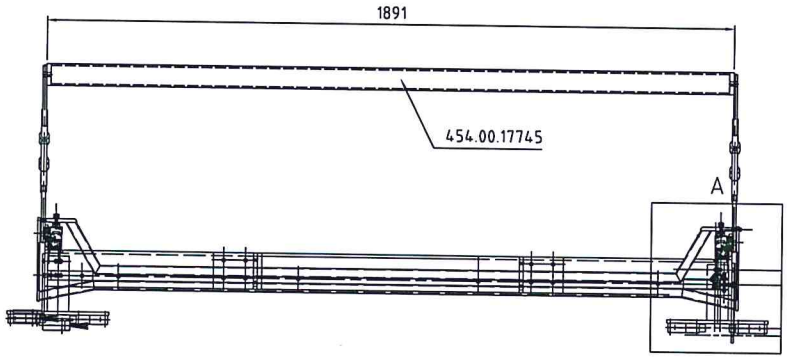

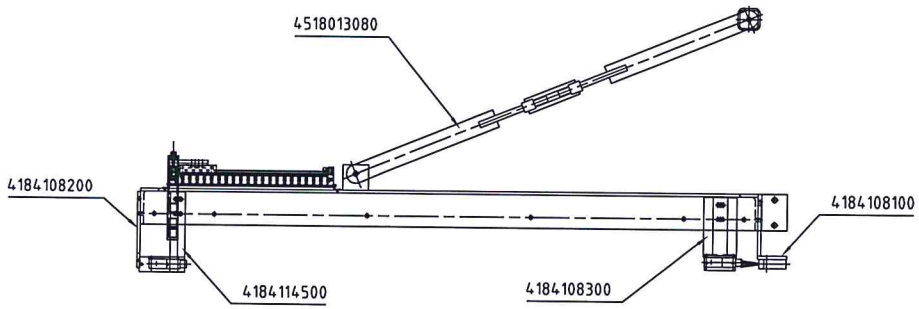

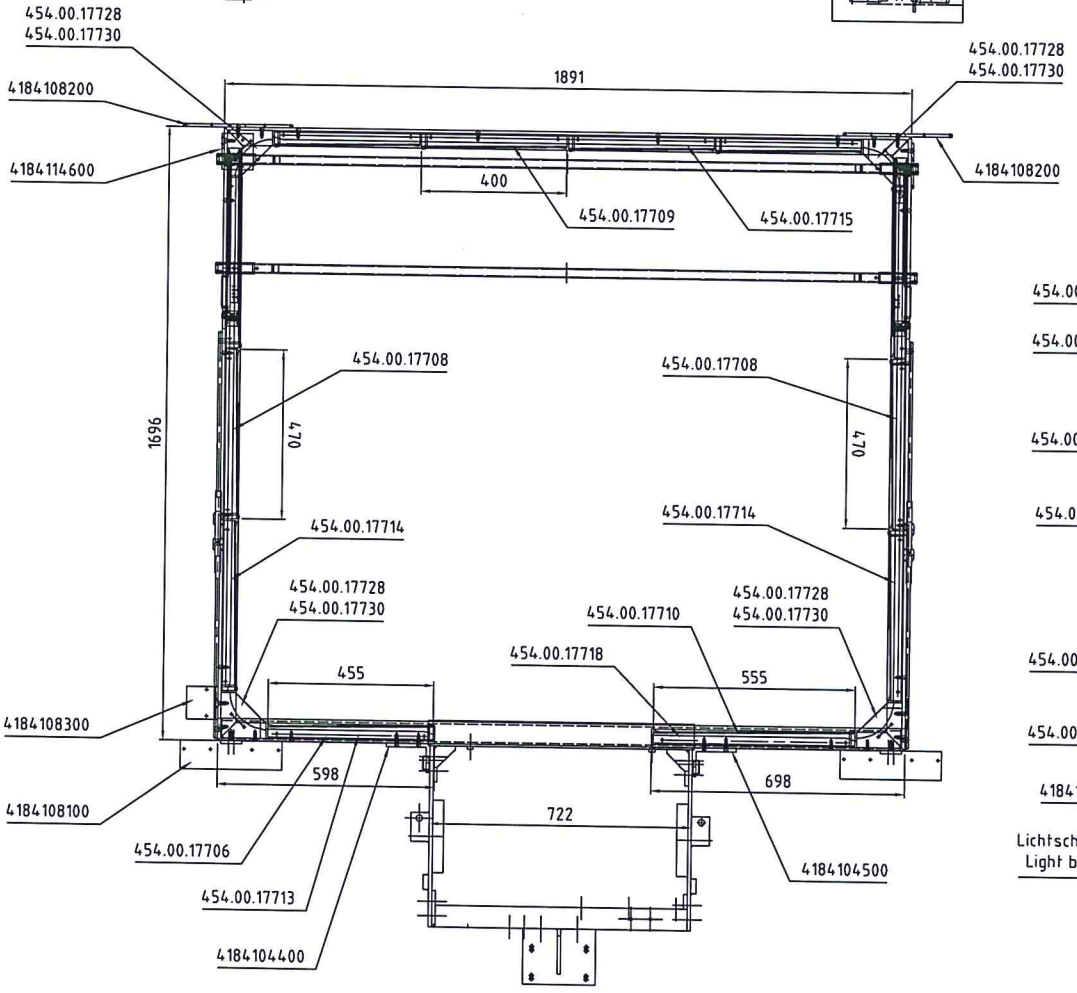

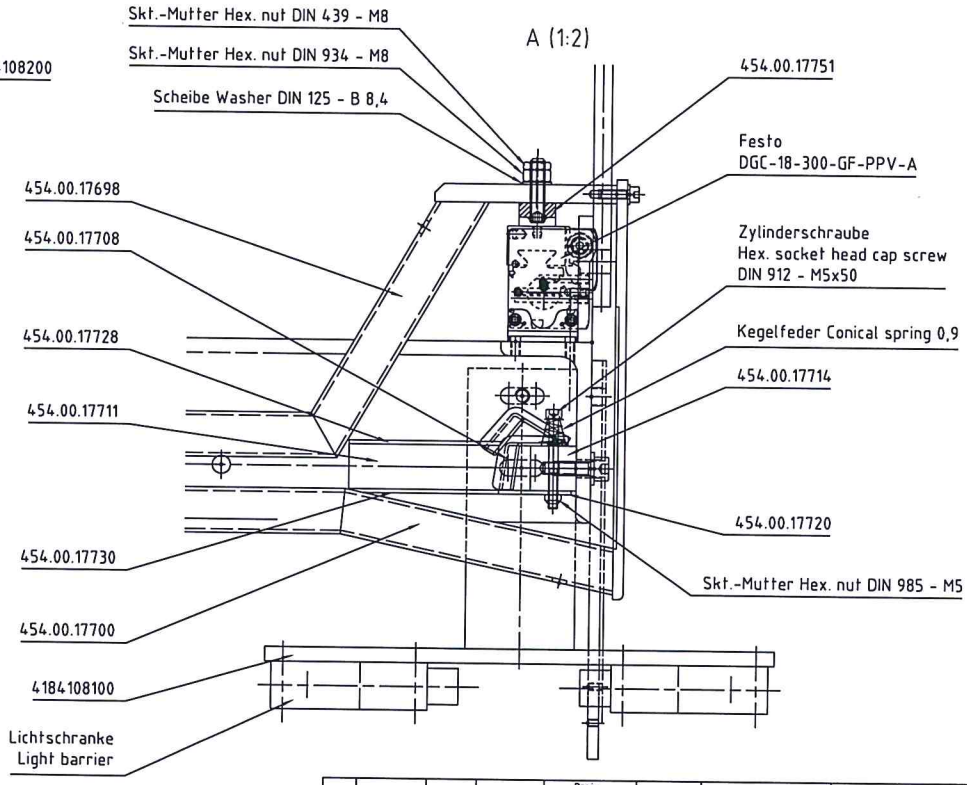

				Proj.-Methode:	Oberfläche DIN ISO 1302	Maßstab 1 : 10	Position - Menge -
						Halbzeug-/ Werkstoffbezeichnung: -	Werkstoff-Nr.: -
					Datum	Name	
					Bearb 04.09.2013	H.Platzer	Kanalsystem
-	-	-	-		Gepr 04.09.2013	H.Platzer	Strap guide channel
-	-	-	-		Norm		
Zust.	Änderungen	Datum	Name				
Allgemeintoleranz ISO 2768-m	0,5 - 6 +/- 0,1	üb 30 - 120 +/- 0,3	üb 400 - 1000 +/- 0,8	TITAN		454.70.01172	Blatt - Bl
	üb 6 - 30 +/- 0,2	üb 120 - 400 +/- 0,5	üb 1000 - 2000 +/- 1,2	D-58332 Schwelm			
				Alle Rechte gem. DIN34 Abschn. 2.1 vorbe.		Dateiname	

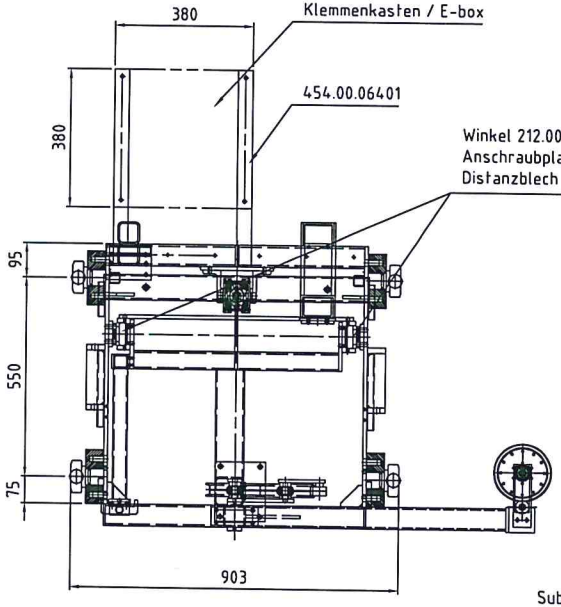

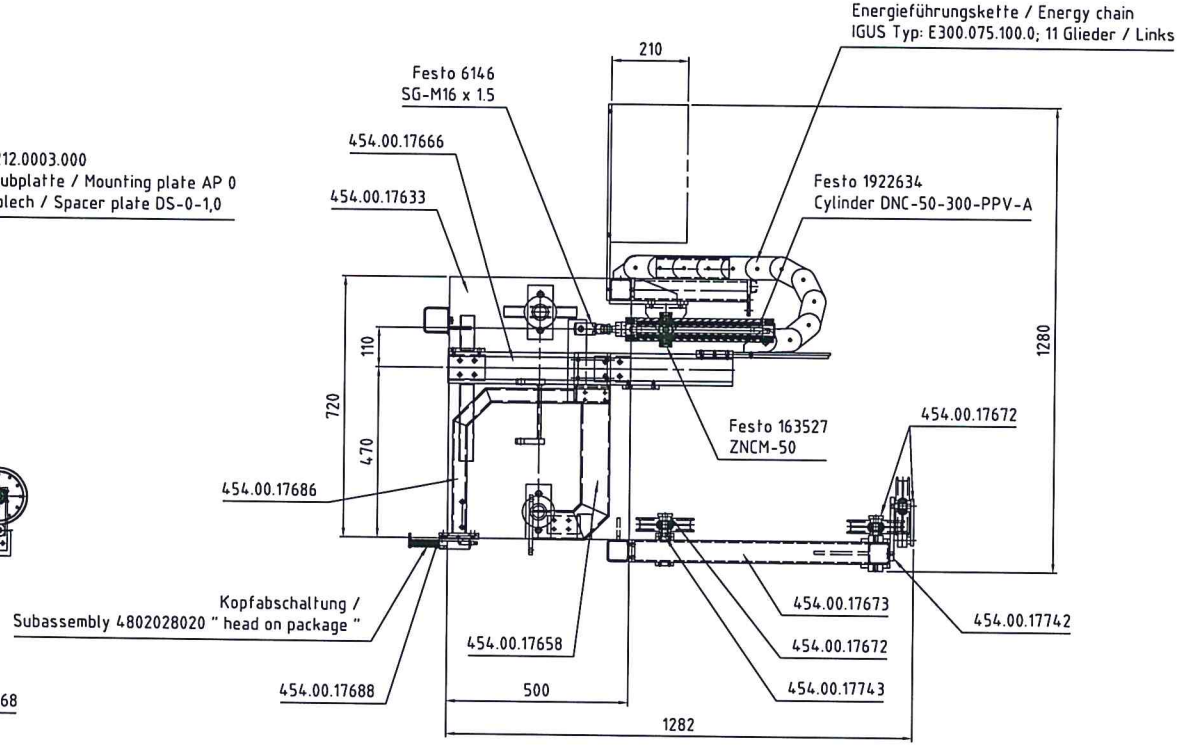

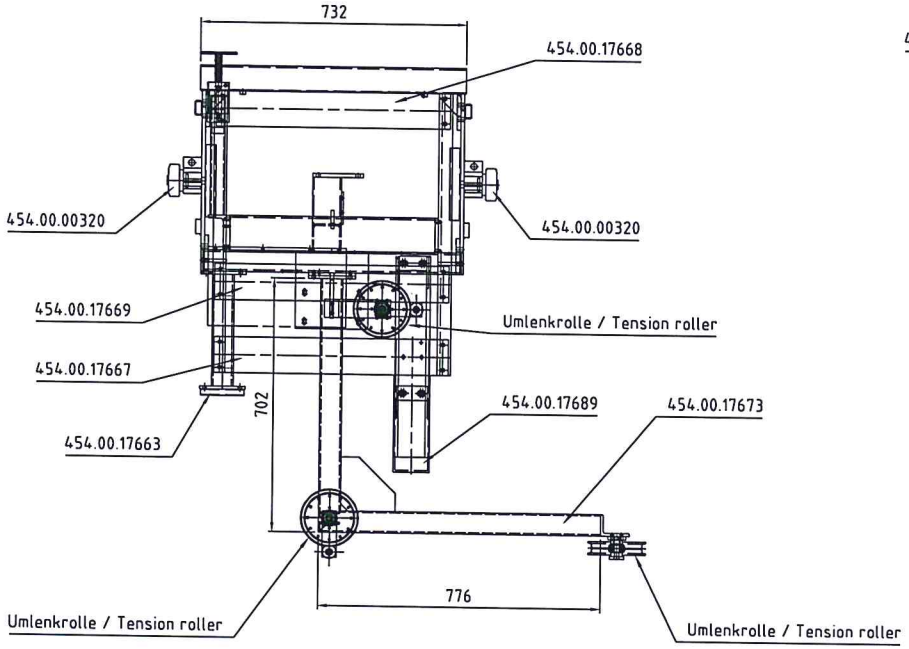

						Proj.-Methode:	Oberfläche DIN ISO 1302	Maßstab 1 : 10	Position -	Menge -	
								Halbzeug-/ Werkstoffbezeichnung: -		Werkstoff-Nr.: -	
							Datum	Name			
						Bearb	04.09.2013	H.Platzer			
-	-	-	-			Gepr	09.09.2013	H.Platzer			
-	-	-	-			Norm					
Zust.	Änderungen		Datum	Name							
Allgemeintoleranz ISO 2768-m	0,5 - 6 +/- 0,1	üb 30 - 120 +/- 0,3	üb 400 - 1000 +/- 0,8			TITAN D-58332 Schwelm		Schlitten Carriage VS11-H			
	üb 6 - 30 +/- 0,2	üb 120 - 400 +/- 0,5	üb 1000 - 2000 +/- 1,2					454.70.01173			Blatt - Bl
						Alle Rechte gem. DIN34 Abschn. 2.1 vorbe.		Dateiname			

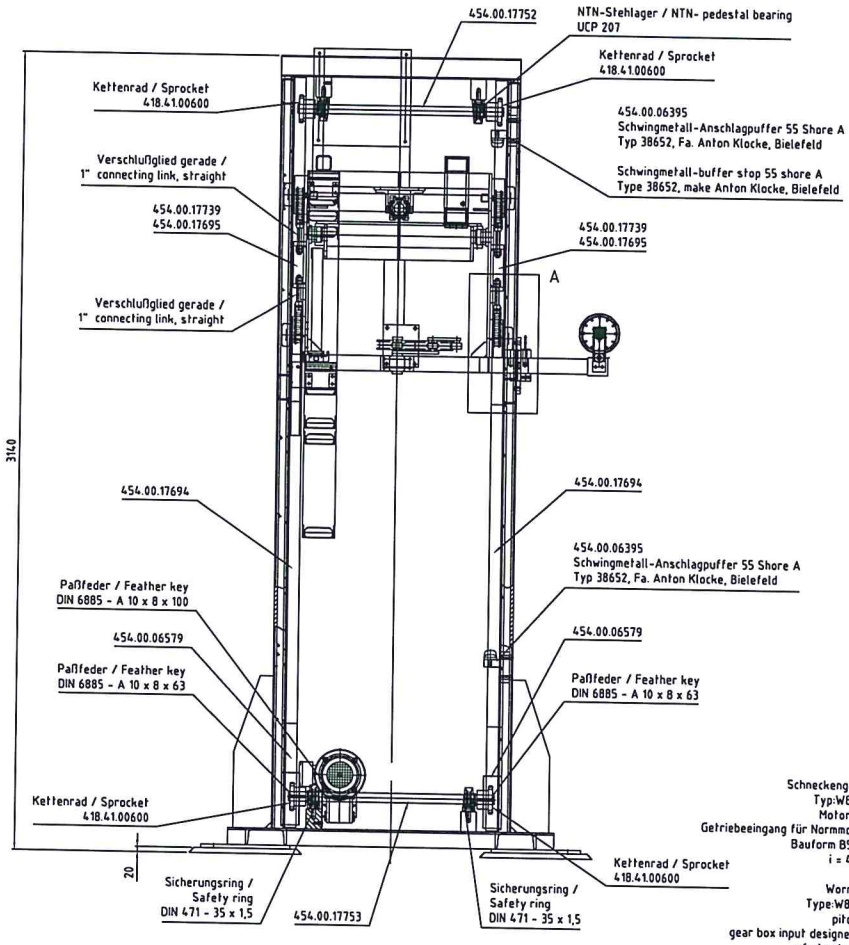

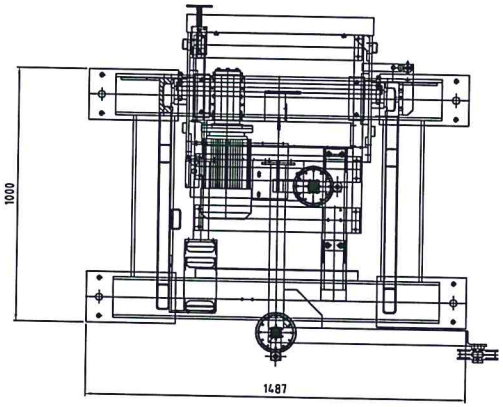

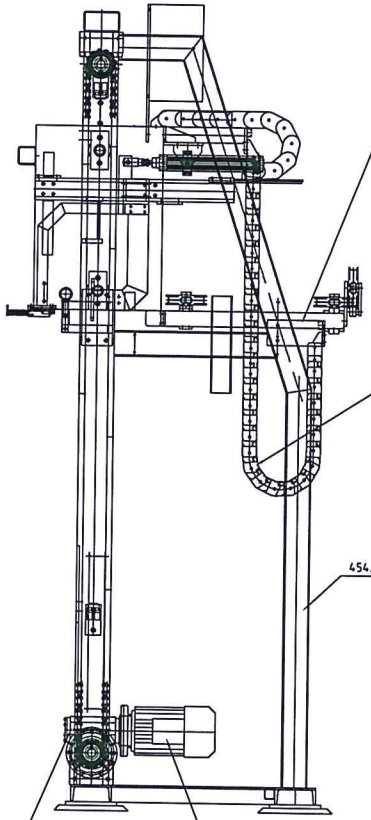

A (1:2.5)

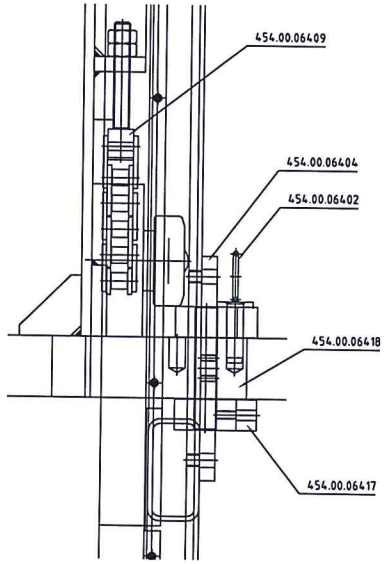

						Proj.-Methode:	Oberfläche DIN ISO 1302	Maßstab 1:10	Position -	Menge -	
								Maßzeug-/ Werkstoffbezeichnung -		Werkstoff-Nr.: -	
							Datum	Name			
						Bearb.	11.09.2013	H.Platzer			
						Gepr.	11.09.2013	H.Platzer			
						Norm					
Zust.	Änderungen		Datum	Name							
Allgemeintoleranz ISO 2768-m		0,5 - 6 +/- 0,1	üb 6 - 30 +/- 0,2	üb 30 - 120 +/- 0,3	üb 120 - 400 +/- 0,5	üb 400 - 1000 +/- 0,8	üb 1000 - 2000 +/- 1,2	TITAN D-58332 Schwein		Maschinenständer machine frame VS11-H	
								Alle Rechte gem. DIN 34 Absatz 2 beachten		454.70.01179	Blatt - Bl.

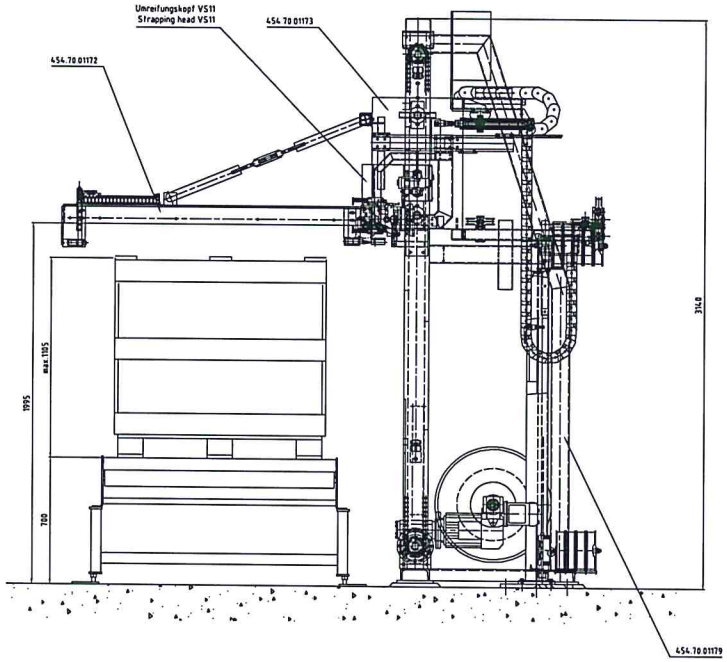
Umreifungskopf VS11
Strapping head VS11
454.70.01173
454.70.01172
454.70.01179
3148
1995
max.1165
700

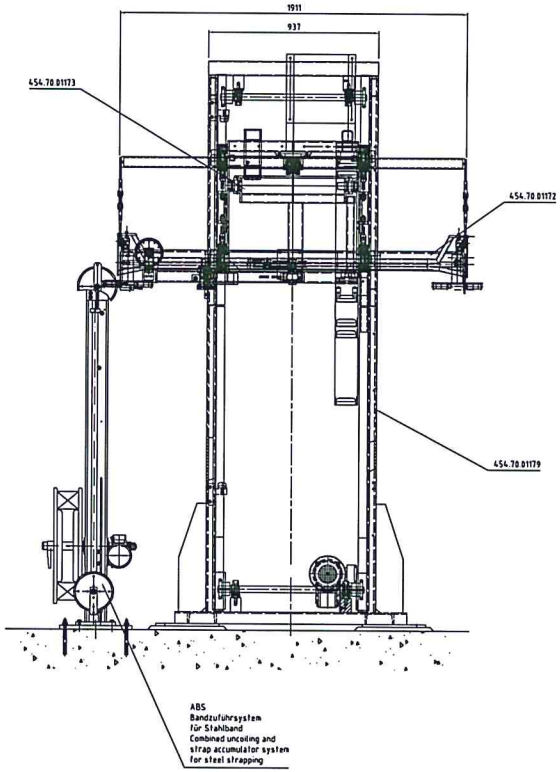
1911
937
454.70.01173
454.70.01172
454.70.01179
ABS
Bandzuführsystem
für Stahlband
Combined uncoiling and
strap accumulator system
for steel strapping

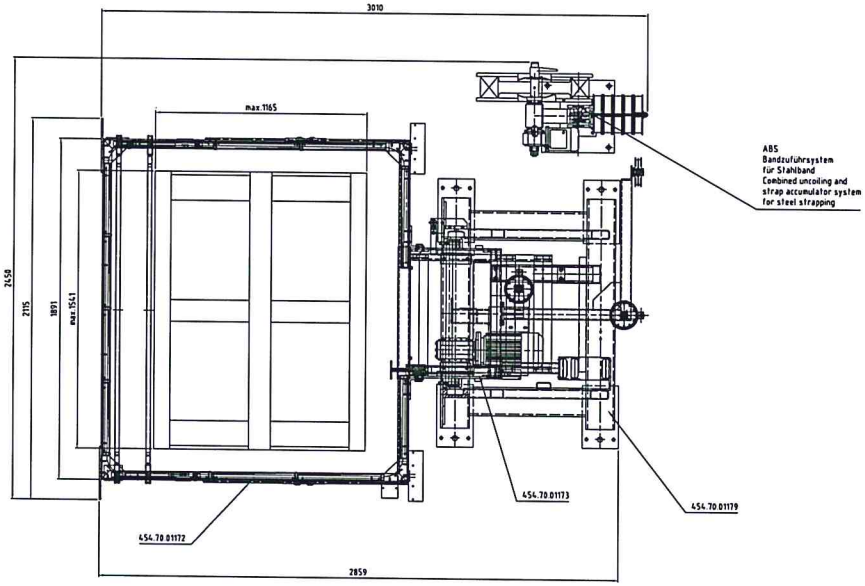
3010
max.1165
ABS
Bandzuführsystem
für Stahlband
Combined uncoiling and
strap accumulator system
for steel strapping
2458
2115
1891
max.1541
454.70.01173
454.70.01179
454.70.01172
2859

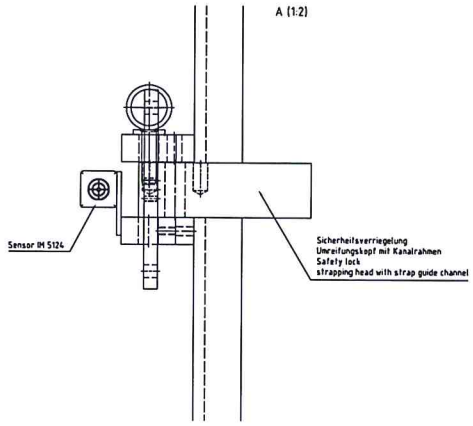
A (1:2)
Sensor IM 5124
Sicherheitsverriegelung
Umreifungskopf mit Kanalrahmen
Safety lock
strapping head with strap guide channel

| | | |

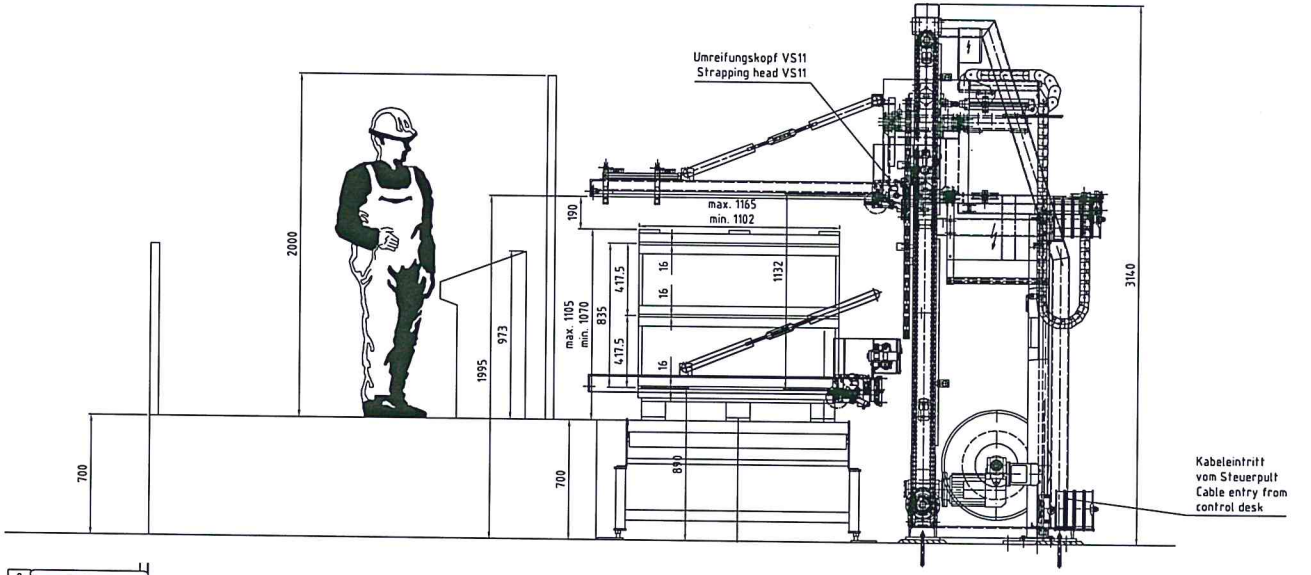

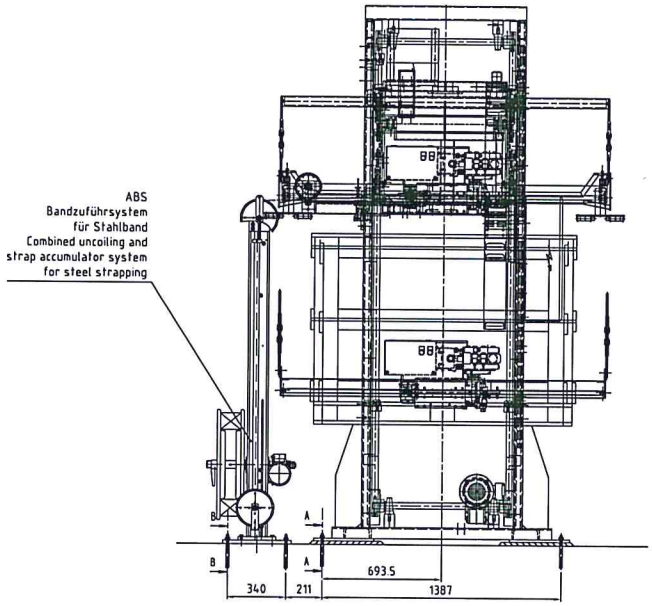

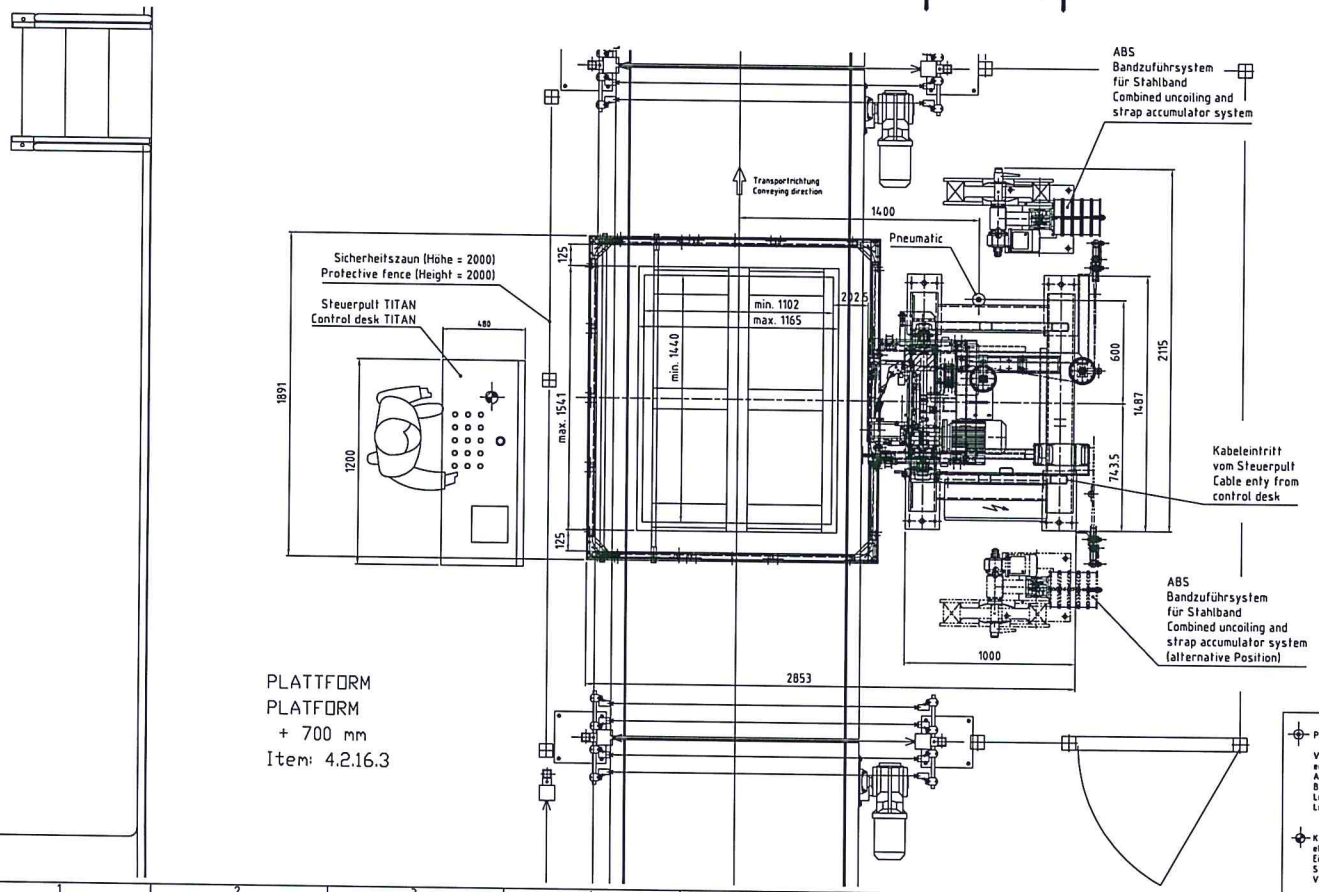

PLATTFORM
PLATFORM
+ 700 mm
Item: 4.2.16.3

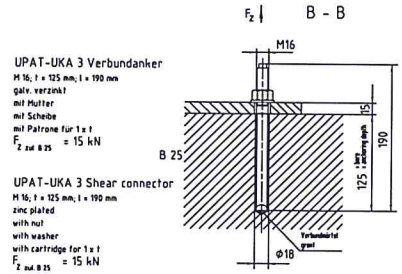

Bandspeicher/Abroller
Accumulator/Dispenser

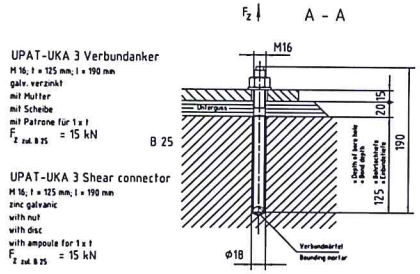

Maschinenrahmen
Machine frame

Sicherheitseinrichtungen und Schutzgitter in Verbindung mit der Gesamtanlage bauseits
Security equipment and protective fences in connection with the entire plant to be provide by customer.

Pneumatik:
Versorgung mit aufbereiteter, entwässerter Druckluft bauseits, Anschluss R1/2"
Betriebsdruck mind. 5 bar Fließdruck
Luftbedarf 0,4 Nm³/min.
Luftverbrauch 0,3 Nm³/Umreifung

Pneumatic equipment: supply of conditioned, dehydrated air pressure
Air supply R1/2"
(to be provided for by operator)
Operation pressure min 5 bar flow pressure
Air requirement 0.4 Nm³ /min
Air consuption 0.3 Nm³/strapping

Kabel, Kabelzuführung und elektr. Einspeisung bauseits
Einspeisung 480V 60Hz
Steuerspannung 24V DC
Ventilspannung 24V DC

Cable, Cable links and main supply to be provided for by the operator
Electrical supply : 480V 60Hz
Control voltage : 24V DC
Valve voltage : 24V DC

Zust.	Änderungen	Datum	Name
-	-	-	-
-	-	-	-

Allgemeintoleranz ISO 2768-m: 0,5 - 6 +/- 0,1; ab 30 - 120 +/- 0,3; ab 400 - 1000 +/- 0,8; ab 6 - 30 +/- 0,2; ab 120 - 400 +/- 0,5; ab 1000 - 2000 +/- 1,2

Proj.-Methode: | Oberfläche DIN ISO 1302 | Maßstab 1 : 10 | Position - | Menge -
Halbzeug-/ Werkstoffbezeichnung: | Werkstoff-Nr.:

	Datum	Name
Bearb.	28.06.2013	Philipp
Gepr.	09.07.2013	Platzer
Norm.		

TITAN D-58332 Schwelm
Alle Rechte gem. DIN34 Abschn. 2.1 vorbe.

VS11-H Übersichtsplan
Layout

454.90.00756

Blatt -
Datename

BiNaTec GmbH

Berliner Straße 51-55
D-58332 Schwelm
Tel: +49 (0) 2336 / 808-400
Fax: +49 (0) 2336 / 808-414

customer : Titan Umreifungstechnik
plant designation : VS11-H
drawing number :
kommission : Möllers

manufacturer comp.: TITAN Umreifungstechnik GmbH & Co. KG
Berliner Str. 51-55
58332 Schwelm

product :
type :
installation place: Schwelm
partial character.:
special environme.:
location : Beckum
regulation : VDE 0100
enclosure : IP 55

control cabinet: Rittal
power supply : 3 x 480V 60Hz / PE
feed line : 4 x 2,5 mm²
control voltage: 24V DC
year of constr.: 2013

project name : T13079_MOELLERS_HORIZONTAL
project path : C:\EPLAN4\P\BINA\

project beginning : 26.08.13
project responsi. Person: Lo Grasso
last change : 26.11.13
last editor : BI9

station number : 009

number of pages : 195

+A02/1

			date	26.08.13	Titan Umreifungstechnik	TITAN	cover sheet	= SH==DOKU	+ A01	
			editor	Lo Grasso	Berliner Straße 51-55					
			check.	26.11.13	58332 Schwelm		VS11-H	T13079		Sh. 1
change	date	name	standa	VDE 0100	origin	replace for	replace through	Möllers		1 Sh.

BI_A3J1D

table of contents

split X: an automatically produced side was worked over again manually

place	place	page	page designation	page additional field	date	editor	X
SH==DOKU	A01	1	cover sheet		26.11.13	BI9	
SH==DOKU	A02	1	table of contents		26.11.13	BI9	
SH==DOKU	A02	2	table of contents		26.11.13	BI9	
SH==DOKU	A02	3	table of contents		26.11.13	BI9	
SH==DOKU	A02	4	table of contents		26.11.13	BI9	
SH==DOKU	A02	5	table of contents		26.11.13	BI9	
SH==DOKU	A02	6	table of contents		26.11.13	BI9	
SH==DOKU	A02	7	table of contents		26.11.13	BI9	
SH==DOKU	A03	1	Higher-level assignment / Location designation		26.11.13	BI9	
SH==DOKU	A04	1	terminals definition		26.11.13	BI9	
SH==DOKU	A05	1	Profibus-DP overview		26.11.13	BI9	
SH==DOKU	A06	1	overview terminal housings		26.11.13	BI9	
SH==DOKU	A06	2	overview terminal housings		26.11.13	BI9	
SH==DOKU	P01	1	control desk assembly		26.11.13	BI9	
SH==DOKU	P01	2	control desk assembly desk cover		26.11.13	BI9	
SH==DOKU	P01	3	control desk assembly mounting plates		26.11.13	BI9	
SH==DOKU	L01	1	Position of terminal box dispenser and tape storage ABS		26.11.13	BI9	
SH==DOKU	L01	2	Building control point dispenser and tape storage ABS		26.11.13	BI9	
SH==DOKU	L10	1	terminal box at machine		26.11.13	BI9	
SH==DOKU	L10	2	terminal box at machine		26.11.13	BI9	
SH==DOKU	L10	3	Terminal box mounting plate		26.11.13	BI9	
SH==DOKU	L18	1	assembly terminal box liftingunit		26.11.13	BI9	
SH==D01	P01	1	power supply		26.11.13	BI9	
SH==D02	P01	1	dispenser		26.11.13	BI9	
SH==D04	P01	1	lifting drive / Power Module		26.11.13	BI9	
SH==D04	P01	2	lifting drive / Safe Brake Relay		26.11.13	BI9	
SH==D04	P01	3	lifting drive / Control Unit		26.11.13	BI9	
SH==D04	P01	4	lift motor		26.11.13	BI9	
SH==D04	P01	5	lift drive encoder		26.11.13	BI9	
SH==F01	P01	1	power supply 230V ac		26.11.13	BI9	

+A01/1

			date	26.08.13	Titan Umreifungstechnik	TITAN	table of contents	= SH==DOKU	+A02
			editor	Lo Grasso	Berliner Straße 51-55				
			check.	26.11.13	58332 Schwelm		VS11-H	T13079	Sh. 1
change	date	name	standa	VDE 0100	origin / replace for / replace through		Möllers		7 Sh.

table of contents

split X: an automatically produced side was worked over again manually

place	place	page	page designation	page additional field	date	editor	X
SH==G01	P01	1	power supply 24V dc		26.11.13	BI9	
SH==G01	P01	1.1	power supply 24V dc		26.11.13	BI9	
SH==G01	P01	2	power supply 24V dc		26.11.13	BI9	
SH==G01	P01	3	power supply 24V DC via emergency stop		26.11.13	BI9	
SH==G01	P01	4	power supply 24V DC via emergency stop and safety door		26.11.13	BI9	
SH==G01	P01	5	power supply 24V dc		26.11.13	BI9	
SH==G01	P01	6	power supply 24V dc		26.11.13	BI9	
SH==G01	P01	7	power supply 24V dc ups		26.11.13	BI9	
SH==G01	P01	8	power supply 24V dc / to the main terminal housing		26.11.13	BI9	
SH==K01	P01	1	assembly s7-300 rack		26.11.13	BI9	
SH==K01	P01	2	assembly s7-300 rack		26.11.13	BI9	
SH==K01	P01	3	reserve		26.11.13	BI9	
SH==K01	P01	5	Occupancy digital input / digital output		26.11.13	BI9	
SH==K01	P01	6	allocation digital intput group		26.11.13	BI9	
SH==K01	P01	7	allocation digital intput group		26.11.13	BI9	
SH==K01	P01	8	allocation digital intput group		26.11.13	BI9	
SH==K01	P01	9	Occupancy counter module		26.11.13	BI9	
SH==K01	P01	10	Occupancy digital input / digital output		26.11.13	BI9	
SH==K01	P01	12	Operator Panel 177B		26.11.13	BI9	
SH==L01	P01	1	plc input byte 4		26.11.13	BI9	
SH==L01	P01	2	plc input byte 5		26.11.13	BI9	
SH==L01	P01	3	plc input byte 6		26.11.13	BI9	
SH==L01	P01	4	plc input byte 7		26.11.13	BI9	
SH==L01	P01	5	plc input byte 8		26.11.13	BI9	
SH==L01	P01	6	plc input byte 2		26.11.13	BI9	
SH==L01	P01	7	plc input byte 9		26.11.13	BI9	
SH==L01	P01	8	plc input byte 10		26.11.13	BI9	
SH==L01	P01	9	plc input byte 11		26.11.13	BI9	
SH==L01	P01	10	plc input byte 3		26.11.13	BI9	
SH==L01	P01	11	plc counter module		26.11.13	BI9	

			date	26.08.13	Titan Umreifungstechnik	TITAN	table of contents	= SH==DOKU	+ A02
			editor	Lo Grasso	Berliner Straße 51-55				
			check.	26.11.13	58332 Schwelm		VS11-H	T13079	Sh. 2
change	date	name	standa	VDE 0100	origin / replace for / replace through		Möllers		7 Sh.

BI_A3J1D

table of contents

split X: an automatically produced side was worked over again manually

place	place	page	page designation	page additional field	date	editor	X
SH==L01	P01	12	plc counter module		26.11.13	BI9	
SH==L01	P01	13	plc input byte 16		26.11.13	BI9	
SH==M01	P01	1	plc output byte 12		26.11.13	BI9	
SH==M01	P01	2	plc output byte 13		26.11.13	BI9	
SH==M01	P01	3	plc output byte 14		26.11.13	BI9	
SH==M01	P01	4	plc output byte 15		26.11.13	BI9	
SH==M01	P01	5	plc output byte 2		26.11.13	BI9	
SH==M01	P01	6	plc output byte 3		26.11.13	BI9	
SH==M01	P01	7	plc counter module		26.11.13	BI9	
SH==M01	P01	8	plc output byte 16		26.11.13	BI9	
SH==G10	L10	1	24V power supply in the main terminal box		26.11.13	BI9	
SH==N01	P01	1	emergency stop loop		26.11.13	BI9	
SH==N01	P01	2	empty sheet		26.11.13	BI9	
SH==N01	P01	3	emergency stop module		26.11.13	BI9	
SH==N01	P01	4	emergency stop extension module		26.11.13	BI9	
SH==N02	P01	1	empty sheet		26.11.13	BI9	
SH==N02	P01	2	empty sheet		26.11.13	BI9	
SH==N02	P01	3	safety door module		26.11.13	BI9	
SH==N02	P01	4	safety door extension module		26.11.13	BI9	
SH==X01	P01	1	signal exchange emergency stop		26.11.13	BI9	
SH==X02	P01	1	signal exchange safety door		26.11.13	BI9	
SH==X03	P01	1	signal exchange customer control -> BiNaTec		26.11.13	BI9	
SH==X03	P01	2	signal exchange BiNaTec -> customer control		26.11.13	BI9	
SH==X03	P01	3	signal exchange home position		26.11.13	BI9	
SH==AUSW	P01	1	Klemmenleisten- und Steckerübersichtsplan		26.11.13	BI9	
SH==AUSW	P01	2	=SH==D01+P01-X1		26.11.13	BI9	
SH==AUSW	P01	3	=SH==D02+P01-X3		26.11.13	BI9	
SH==AUSW	P01	4	=SH==D04+P01-X5		26.11.13	BI9	
SH==AUSW	P01	5	=SH==F01+P01-X11		26.11.13	BI9	
SH==AUSW	P01	6	=SH==G01+P01-X10		26.11.13	BI9	

			date	26.08.13	Titan Umreifungstechnik	TITAN	table of contents	= SH==DOKU / + A02
			editor	Lo Grasso	Berliner Straße 51-55			
			check.	26.11.13	58332 Schwelm		VS11-H	T13079 / Sh. 3 / 7 Sh.
change	date	name	standa	VDE 0100	origin	replace for / replace through	Möllers	

BI_A3J1D

table of contents

split X: an automatically produced side was worked over again manually

place	place	page	page designation	page additional field	date	editor	X
SH==AUSW	P01	7	=SH==G01+P01-X13		26.11.13	BI9	
SH==AUSW	P01	8	=SH==L01+P01-X15		26.11.13	BI9	
SH==AUSW	P01	9	=SH==L01+P01-X15		26.11.13	BI9	
SH==AUSW	P01	10	=SH==L01+P01-X15		26.11.13	BI9	
SH==AUSW	P01	11	=SH==M01+P01-X16		26.11.13	BI9	
SH==AUSW	P01	12	=SH==M01+P01-X16		26.11.13	BI9	
SH==AUSW	P01	13	=SH==N01+P01-X13		26.11.13	BI9	
SH==AUSW	P01	14	=SH==X01+P01-X23		26.11.13	BI9	
SH==AUSW	P01	15	=SH==X02+P01-X24		26.11.13	BI9	
SH==AUSW	P01	16	=SH==X03+P01-X25		26.11.13	BI9	
SH==AUSW	P01	17	=SH==X03+P01-X26		26.11.13	BI9	
SH==AUSW	P01	18	Kabelübersicht		26.11.13	BI9	
SH==AUSW	P01	19	=SH==D01+P01-W11		26.11.13	BI9	
SH==AUSW	P01	20	=SH==D02+P01-W11		26.11.13	BI9	
SH==AUSW	P01	21	=SH==D04+P01-W37		26.11.13	BI9	
SH==AUSW	P01	22	=SH==D04+P01-W42		26.11.13	BI9	
SH==AUSW	P01	23	=SH==D04+P01-W45		26.11.13	BI9	
SH==AUSW	P01	24	=SH==D04+P01-W45.1		26.11.13	BI9	
SH==AUSW	P01	25	=SH==D04+P01-W53		26.11.13	BI9	
SH==AUSW	P01	26	=SH==F01+P01-W24		26.11.13	BI9	
SH==AUSW	P01	27	=SH==G01+P01-W10		26.11.13	BI9	
SH==AUSW	P01	28	=SH==G01+P01-W12		26.11.13	BI9	
SH==AUSW	P01	29	=SH==K01+P01-W121		26.11.13	BI9	
SH==AUSW	P01	30	=SH==L01+P01-W31		26.11.13	BI9	
SH==AUSW	P01	31	=SH==L01+P01-W35		26.11.13	BI9	
SH==AUSW	P01	32	=SH==L01+P01-W61		26.11.13	BI9	
SH==AUSW	P01	33	=SH==L01+P01-W71		26.11.13	BI9	
SH==AUSW	P01	34	=SH==L01+P01-W76		26.11.13	BI9	
SH==AUSW	P01	35	=SH==L01+P01-W77		26.11.13	BI9	
SH==AUSW	P01	36	=SH==G10+P01-W12		26.11.13	BI9	

3 5

change	date	name			origin	replace for	replace through
			date	26.08.13	Titan Umreifungstechnik		
			editor	Lo Grasso	Berliner Straße 51-55		
			check.	26.11.13	58332 Schwelm		
			standa	VDE 0100			

TITAN

table of contents

VS11-H

Möllers

= SH==DOKU | + A02

T13079

Sh. 4

7 Sh.

0 1 2 3 4 5 6 7 8 9

BI_A3J1D

table of contents

split X: an automatically produced side was worked over again manually

place	place	page	page designation	page additional field	date	editor	X
SH==AUSW	P01	37	=SH==X01+P01-W11		26.11.13	BI9	
SH==AUSW	P01	38	=SH==X02+P01-W11		26.11.13	BI9	
SH==AUSW	P01	39	=SH==X03+P01-W11		26.11.13	BI9	
SH==AUSW	P01	40	=SH==X03+P01-W20		26.11.13	BI9	
SH==AUSW	P01	41	Stückliste		26.11.13	BI9	
SH==AUSW	P01	42	Stückliste		26.11.13	BI9	
SH==AUSW	P01	43	Stückliste		26.11.13	BI9	
SH==AUSW	P01	44	Stückliste		26.11.13	BI9	
SH==AUSW	L01	1	Klemmenleisten- und Steckerübersichtsplan		26.11.13	BI9	
SH==AUSW	L01	2	=SH==D02+L01-X3		26.11.13	BI9	
SH==AUSW	L01	3	=SH==L01+L01-X15		26.11.13	BI9	
SH==AUSW	L01	4	Kabelübersicht		26.11.13	BI9	
SH==AUSW	L01	5	=SH==D02+L01-W11		26.11.13	BI9	
SH==AUSW	L01	6	=SH==L01+L01-W41		26.11.13	BI9	
SH==AUSW	L01	7	=SH==L01+L01-W42		26.11.13	BI9	
SH==AUSW	L01	8	=SH==L01+L01-W43		26.11.13	BI9	
SH==AUSW	L01	9	=SH==L01+L01-W46		26.11.13	BI9	
SH==AUSW	L01	10	Stückliste		26.11.13	BI9	
SH==AUSW	L10	1	Klemmenleisten- und Steckerübersichtsplan		26.11.13	BI9	
SH==AUSW	L10	2	=SH==D02+L10-X3		26.11.13	BI9	
SH==AUSW	L10	3	=SH==L01+L10-X15		26.11.13	BI9	
SH==AUSW	L10	4	=SH==L01+L10-X15		26.11.13	BI9	
SH==AUSW	L10	5	=SH==L01+L10-X15		26.11.13	BI9	
SH==AUSW	L10	6	=SH==M01+L10-X16		26.11.13	BI9	
SH==AUSW	L10	7	=SH==G10+L10-X13		26.11.13	BI9	
SH==AUSW	L10	8	Kabelübersicht		26.11.13	BI9	
SH==AUSW	L10	9	=SH==D02+L10-W11		26.11.13	BI9	
SH==AUSW	L10	10	=SH==D04+L10-W51		26.11.13	BI9	
SH==AUSW	L10	11	=SH==L01+L10-W31		26.11.13	BI9	
SH==AUSW	L10	12	=SH==L01+L10-W33		26.11.13	BI9	

			date	26.08.13	Titan Umreifungstechnik Berliner Straße 51-55 58332 Schwelm	TITAN	table of contents VS11-H	= SH==DOKU	+ A02
			editor	Lo Grasso				T13079	Sh. 5
			check.	26.11.13					7 Sh.
change	date	name	standa	VDE 0100	origin / replace for / replace through		Möllers		

table of contents

split X: an automatically produced side was worked over again manually

place	place	page	page designation	page additional field	date	editor	X
SH==AUSW	L10	13	=SH==L01+L10-W34		26.11.13	BI9	
SH==AUSW	L10	14	=SH==L01+L10-W48		26.11.13	BI9	
SH==AUSW	L10	15	=SH==L01+L10-W51		26.11.13	BI9	
SH==AUSW	L10	16	=SH==L01+L10-W71		26.11.13	BI9	
SH==AUSW	L10	17	=SH==M01+L10-W24		26.11.13	BI9	
SH==AUSW	L10	18	=SH==M01+L10-W25		26.11.13	BI9	
SH==AUSW	L10	19	=SH==M01+L10-W37		26.11.13	BI9	
SH==AUSW	L10	20	=SH==X03+L10-W51		26.11.13	BI9	
SH==AUSW	L10	21	Stückliste		26.11.13	BI9	
SH==AUSW	L18	1	Klemmenleisten- und Steckerübersichtsplan		26.11.13	BI9	
SH==AUSW	L18	2	=SH==L01+L18-X15		26.11.13	BI9	
SH==AUSW	L18	3	=SH==L01+L18-X15		26.11.13	BI9	
SH==AUSW	L18	4	=SH==L01+L18-X15		26.11.13	BI9	
SH==AUSW	L18	5	=SH==L01+L18-X15		26.11.13	BI9	
SH==AUSW	L18	6	=SH==L01+L18-X15		26.11.13	BI9	
SH==AUSW	L18	7	=SH==M01+L18-X16		26.11.13	BI9	
SH==AUSW	L18	8	Kabelübersicht		26.11.13	BI9	
SH==AUSW	L18	9	=SH==L01+L18-W51		26.11.13	BI9	
SH==AUSW	L18	10	=SH==L01+L18-W52		26.11.13	BI9	
SH==AUSW	L18	11	=SH==L01+L18-W53		26.11.13	BI9	
SH==AUSW	L18	12	=SH==L01+L18-W54		26.11.13	BI9	
SH==AUSW	L18	13	=SH==L01+L18-W55		26.11.13	BI9	
SH==AUSW	L18	14	=SH==L01+L18-W56		26.11.13	BI9	
SH==AUSW	L18	15	=SH==L01+L18-W61		26.11.13	BI9	
SH==AUSW	L18	16	=SH==L01+L18-W62		26.11.13	BI9	
SH==AUSW	L18	17	=SH==L01+L18-W63		26.11.13	BI9	
SH==AUSW	L18	18	=SH==L01+L18-W64		26.11.13	BI9	
SH==AUSW	L18	19	=SH==L01+L18-W65		26.11.13	BI9	
SH==AUSW	L18	20	=SH==L01+L18-W67		26.11.13	BI9	
SH==AUSW	L18	21	=SH==M01+L18-W25		26.11.13	BI9	

			date	26.08.13	Titan Umreifungstechnik	TITAN	table of contents	= SH==DOKU	+ A02
			editor	Lo Grasso	Berliner Straße 51-55				
			check.	26.11.13	58332 Schwelm		VS11-H	T13079	Sh. 6
change	date	name	standa	VDE 0100	origin	replace for	replace through	Möllers		7 Sh.

BI_A3J1D

table of contents

split X: an automatically produced side was worked over again manually

place	place	page	page designation	page additional field	date	editor	X
SH==AUSW	L18	22	=SH==M01+L18-W26		26.11.13	BI9	
SH==AUSW	L18	23	=SH==M01+L18-W27		26.11.13	BI9	
SH==AUSW	L18	24	=SH==M01+L18-W28		26.11.13	BI9	
SH==AUSW	L18	25	=SH==M01+L18-W38		26.11.13	BI9	
SH==AUSW	L18	26	Stückliste		26.11.13	BI9	
SH==AUSW	L19	1	Klemmenleisten- und Steckerübersichtsplan		26.11.13	BI9	
SH==AUSW	L19	2	=SH==L01+L19-XK1		26.11.13	BI9	
SH==AUSW	L19	3	=SH==L01+L19-XK1		26.11.13	BI9	
SH==AUSW	L19	4	=SH==L01+L19-XS1		26.11.13	BI9	
SH==AUSW	L19	5	=SH==M01+L19-XK1		26.11.13	BI9	
SH==AUSW	L19	6	=SH==M01+L19-XK1		26.11.13	BI9	
SH==AUSW	L19	7	=SH==M01+L19-XS1		26.11.13	BI9	
SH==AUSW	L19	8	Stückliste		26.11.13	BI9	
SH==AUSW	LK25	1	Kabelübersicht		26.11.13	BI9	
SH==AUSW	LK25	2	=SH==X03+LK25-W11		26.11.13	BI9	

+A03/1

			date	26.08.13	Titan Umreifungstechnik	TITAN	table of contents	= SH==DOKU	+ A02
			editor	Lo Grasso	Berliner Straße 51-55				
			check.	26.11.13	58332 Schwelm		VS11-H	T13079	Sh. 7
change	date	name	standa	VDE 0100	origin	replace for / replace through	Möllers		7 Sh.

BI_A3Y001D

Higher-level assignment / Location designation

plant tag	plant description	location tag	topography
=SH==DOKU		+A01	Deckblatt
=SH==D01		+A02	Inhaltsverzeichnis
=SH==D02		+A03	Anlagen- / Ortskennzeichenübersicht
=SH==D04		+A04	Definition Klemmleisten
=SH==F01		+A05	Profibus-DP Übersicht
=SH==G01		+A06	Übersicht Leitungsverlegung
=SH==K01		+P01	Steuerpult Horizontalmaschine
=SH==L01		+L01	Bandspeicher ABS
=SH==M01		+L10	Hauptklemmkasten an der Maschine
=SH==G10		+L18	Klemmenkasten an der Maschine
=SH==N01		+L19	VS11L Umreifungsaggregat
=SH==N02		+LK23	Signalaustausch Not-Halt
=SH==X01		+LK24	Signalaustausch Schutztür
=SH==X02		+LK25	Signalaustausch Grundstellung
=SH==X03		+IBN	Nur für die Inbetriebnahme
=SH==AUSW			

			date	26.08.13	Titan Umreifungstechnik	TITAN	Higher-level assignment / Location designation	=SH==DOKU	+A03
			editor	Lo Grasso	Berliner Straße 51-55				
			check.	26.11.13	58332 Schwelm		VS11-H	T13079	Sh. 1
change	date	name	standa	VDE 0100	origin	replace for	replace through	Möllers		1 Sh.

terminal designation:	installation place:	terminal designation:	installation place:
=SH==DO1+PO1-X1=supply	control desk	=SH==DO2+L1O-X3=dispenser	main terminal housing
=SH==DO2+PO1-X3=dispenser	control desk	=SH==LO1+L1O-X15=PLC inputs and power supply 24V DC	main terminal housing
=SH==DO4+PO1-X5=lifting drive	control desk	=SH==MO1+L1O-X16=PLC outputs	main terminal housing
=SH==FO1+PO1-X11=power supply 230V AC	control desk	=SH==G1O+L1O-X13=power supply 24V DC	main terminal housing
=SH==GO1+PO1-X1O=power supply für 24V DC power supply units	control desk		
=SH==GO1+PO1-X11=power supply 230V	control desk		
=SH==GO1+PO1-X12=power supply 230V	control desk	=SH==LO1+L18-X15=PLC inputs	terminal box lifting unit
=SH==GO1+PO1-X13=power supply 24V DC	control desk	=SH==MO1+L18-X16=PLC outputs	terminal box lifting unit
=SH==LO1+PO1-X15=PLC inputs and power supply 24V DC	control desk	=SH==LO1+L18-XK1=strapping head	terminal box lifting unit
=SH==MO1+PO1-X16=PLC outputs	control desk	=SH==LO1+L18-XS1=strapping head	terminal box lifting unit
=SH==NO1+PO1-X13=emergency stop	control desk	=SH==MO1+L18-XK1=strapping head	terminal box lifting unit
=SH==XO1+PO1-X23=Signal exchange emergency stop	control desk	=SH==MO1+L18-XS1=strapping head	terminal box lifting unit
=SH==XO2+PO1-X24=Signal exchange protection door	control desk		
=SH==XO3+PO1-X25=Exchange of signals by customer <-> Binatec	control desk		
=SH==XO3+PO1-X26=Signal exchange Binatec <-> by customer	control desk		
=SH==DO2+LO1-X3=dispenser drive	terminal box dispenser		
=SH==LO1+LO1-X15=dispenser strip storage	terminal box dispenser		

+A03/1

+A05/1

change	date	name						
			date	26.08.13	Titan Umreifungstechnik	TITAN	terminals definition	= SH==DOKU	+ A04
			editor	Lo Grasso	Berliner Straße 51-55				
			check.	26.11.13	58332 Schwelm		VS11-H	T13079	Sh. 1
			standa	VDE 0100	origin	replace for	replace through	Möllers		1 Sh.

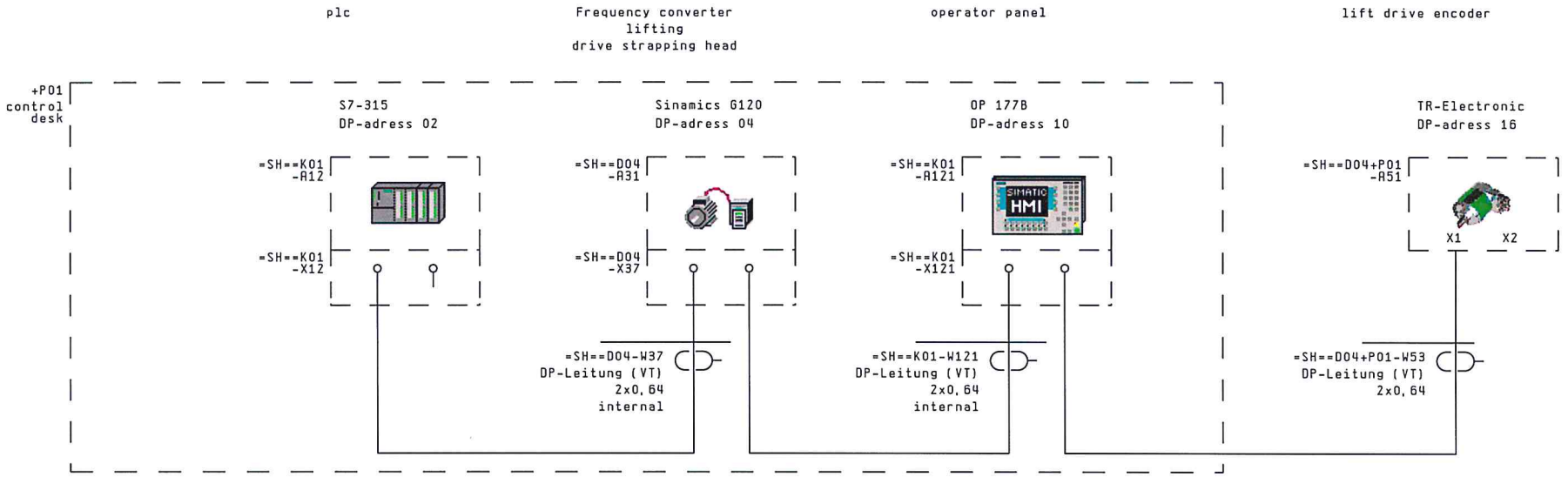

+A04/1

+A06/1

			date	26.08.13	Titan Umreifungstechnik			Profibus-DP overview	= SH==DOKU	+ A05	
			editor	Lo Grasso	Berliner Straße 51-55		TITAN				
			check.	26.11.13	58332 Schwelm			VS11-H	T13079		Sh. 1
change	date	name	standa	VDE 0100	origin	replace for	replace through	Möllers			1 Sh.

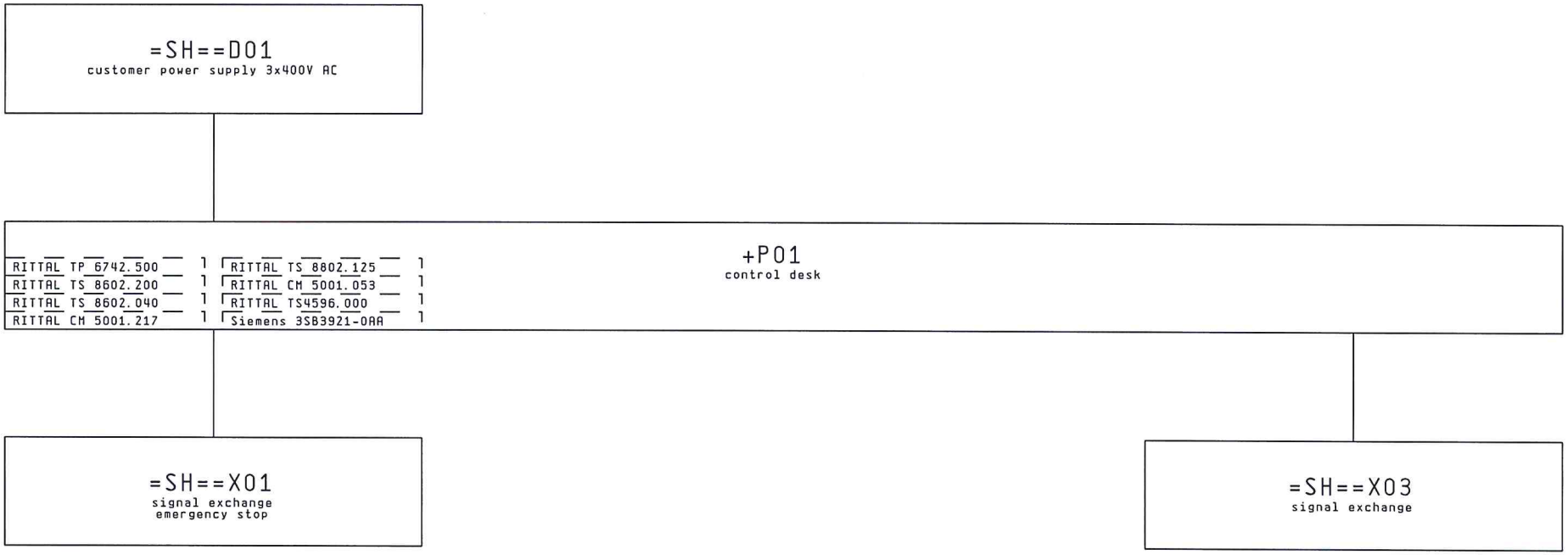

+A05/1

2

			date	26.08.13	Titan Umreifungstechnik	TITAN	overview terminal housings	= SH==DOKU	+ A06
			editor	Lo Grasso	Berliner Straße 51-55				
			check.	26.11.13	58332 Schwelm		VS11-H	T13079	Sh. 1
change	date	name	standa	VDE 0100	origin	replace for / replace through	Möllers		2 Sh.

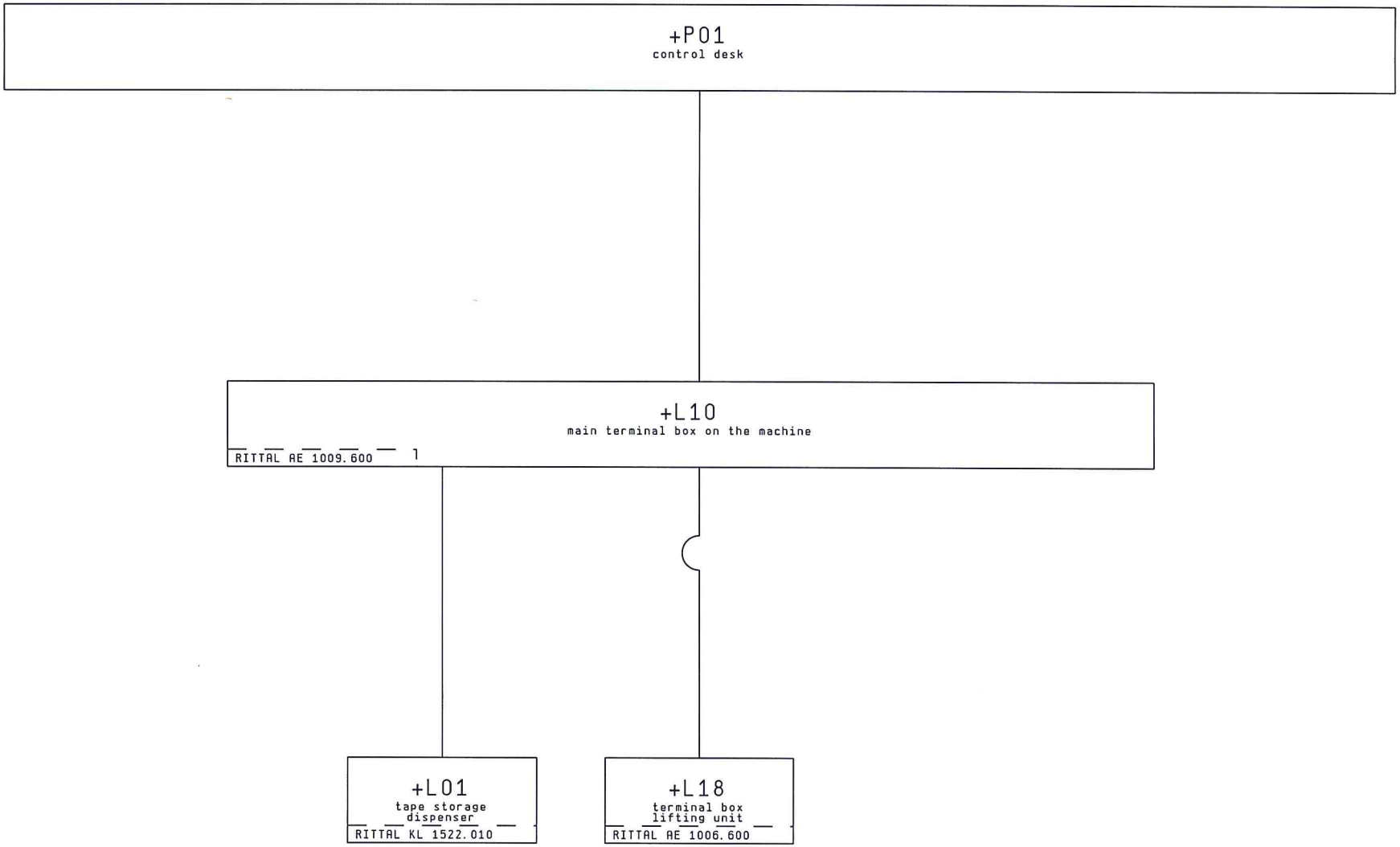

1

+P01/1

			date	26.08.13	Titan Umreifungstechnik	TITAN	overview terminal housings	= SH==DOKU	+ A06
			editor	Lo Grasso	Berliner Straße 51-55				
			check.	26.11.13	58332 Schwelm		VS11-H	T13079	Sh. 2
change	date	name	standa	VDE 0100	origin	replace for	replace through	Möllers	2 Sh.

control desk assembly: +P01

side view from the right

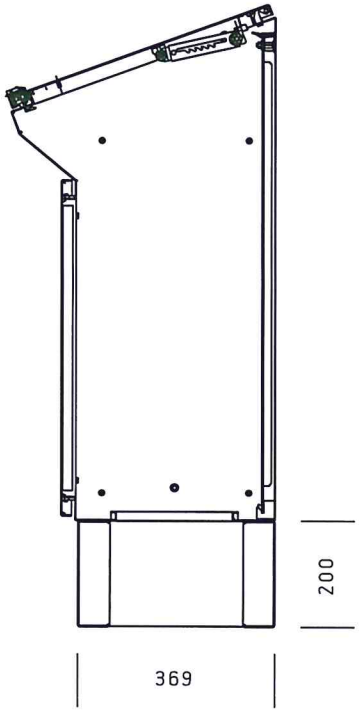

front view

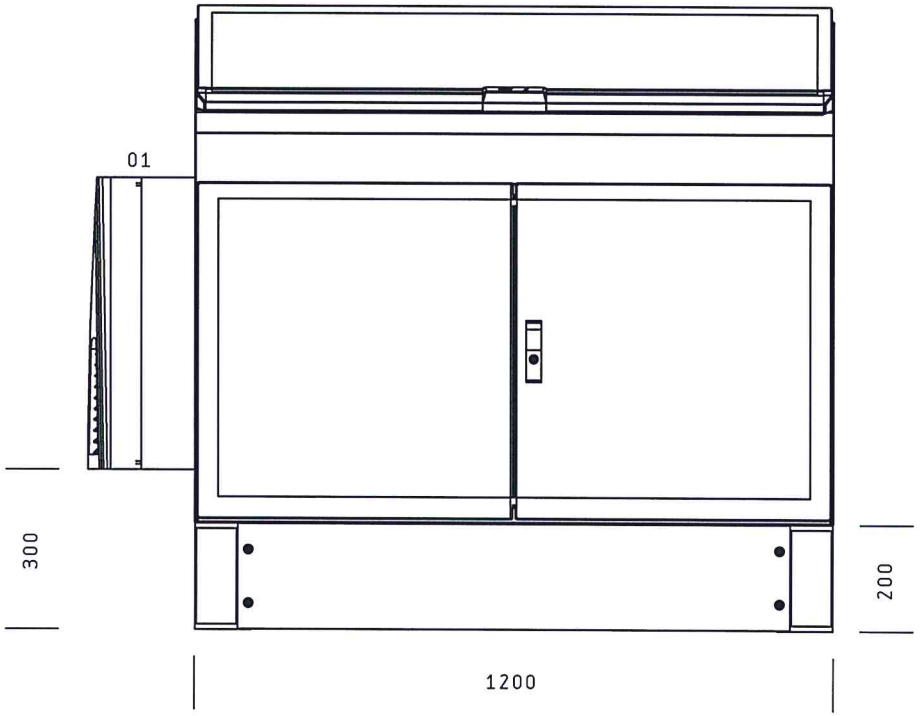

side view from left

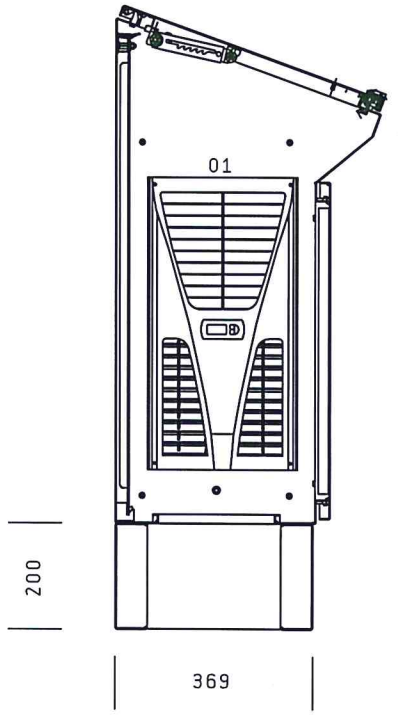

pos.-no.	bmk	description
01	=SH==F01-M17	air conditioner
02		
03		
04		

+A06/2

2

			date	26.08.13	Titan Umreifungstechnik	TITAN	control desk assembly	= SH==DOKU	+ P01
			editor	Lo Grasso	Berliner Straße 51-55				
			check.	26.11.13	58332 Schwelm		VS11-H	T13079	Sh. 1
change	date	name	standa	VDE 0100	origin / replace for / replace through		Möllers		3 Sh.

control desk assembly: +P01

control elements legend

- emercy stop pushbutton
- pushbutton
- iluminated pushbutton
- indicator lamp
- selector switch
- key-operated switch
- potentiometer
- BCD switch
- BCD display
- dummy plug
- main switch

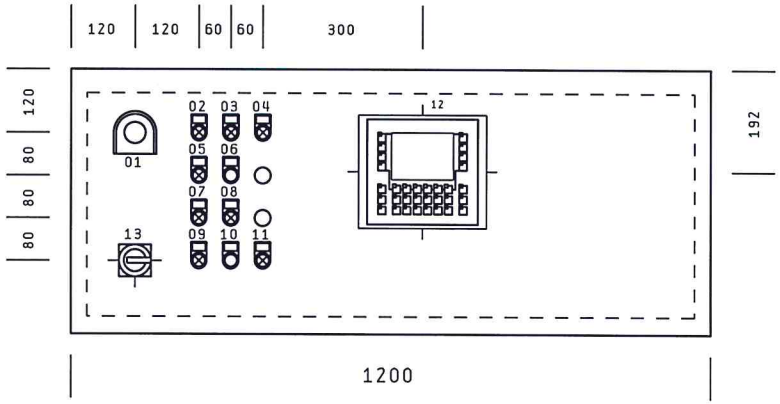

pos.-no.	bmk	description	color
01	=SH==N01-S11	emergency stop	BK/YE
02	=SH==N01-S33 / =SH==M01-H48	emergency stop acknowledge	RD
03	=SH==L01-S87 / =SH==M01-H45	fault acknowledge	RD
04	=SH==L01-S88 / =SH==M01-H46	drive to home position	WH
05	=SH==L01-S81 / =SH==M01-H41	control on	GN
06	=SH==L01-S82	control off	RD
07	=SH==L01-S83 / =SH==M01-H42	manual mode	WH
08	=SH==L01-S84 / =SH==M01-H43	automatic	GN
09	=SH==L01-S85 / =SH==M01-H44	cycle start	GN
10	=SH==L01-S86	cycle stop	RD
11	=SH==L01-S91 / =SH==M01-H47	release transport	YE
12	=SH==K01-A121	operator panel	OP 177B
13	=SH==D01-Q11	main switch	RD/YE
14			
15			

control desk assembly: +P01

pos.-no.	bmk
01	=SH==D01-Q15
02	=SH==D02-Q12
03	=SH==D04-Q11
04	=SH==F01-Q11
05	=SH==G01-F14
06	=SH==G01-F16
07	
08	
09	
10	=SH==G01-G14
11	=SH==G01-G16
12	=SH==G01-G1.11
13	
14	=SH==F01-T11
15	=SH==M01-A18
16	
17	
18	
19	
20	
21	
22	
23	
24	
25	
26	
27	
28	
29	
30	
31	=SH==D04-R16
32	=SH==D04-A14
33	=SH==D04-A21
34	=SH==D04-A31
35	=SH==D04-A38
36	
37	
38	
39	
40	=SH==M01-K11
41	=SH==D04-K22
42	=SH==M01-K31
43	=SH==M01-K32
44	
45	
46	
47	
48	
49	
50	=SH==N01-K32
51	=SH==N01-K42
52	
53	=SH==N02-K32
54	=SH==N02-K42
55	

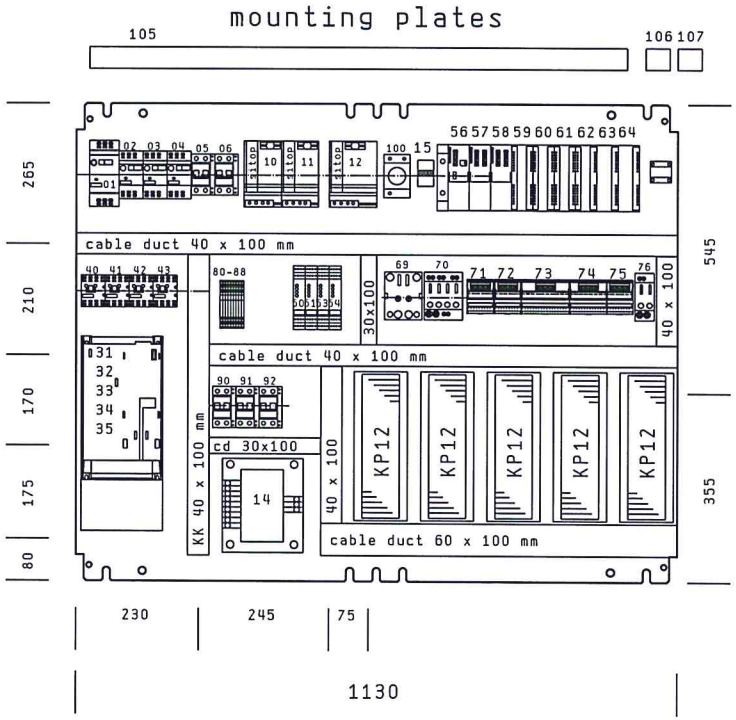

pos.-no.	bmk
56	=SH==K01-A12
57	=SH==K01-A13
58	=SH==K01-A14
59	=SH==K01-A16
60	=SH==K01-A21
61	=SH==K01-A22
62	=SH==K01-A23
63	=SH==K01-A25
64	=SH==K01-A26
65	
66	
67	
68	
69	=SH==G01-A22
70	=SH==G01-F1.11
71	=SH==G01-X34
72	=SH==G01-X44
73	=SH==G01-X54
74	=SH==G01-X64
75	
76	=SH==G01-F22
77	
78	
79	
80	=SH==M01-K16
81	=SH==M01-K81
82	=SH==M01-K82
83	=SH==M01-K83
84	=SH==M01-K84
85	=SH==M01-K85
86	=SH==M01-K86
87	=SH==M01-K87
88	=SH==M01-K88
89	
90	=SH==F01-F11
91	=SH==F01-F15
92	=SH==F01-F18
93	
94	
95	
96	
97	
98	
99	
100	=SH==F01-X15
101	
102	
103	
104	
105	=SH==F01-E16
106	=SH==F01-S16
107	=SH==F01-S18
108	
109	
110	

2

+L01/1

			date	26.08.13	Titan Umreifungstechnik	TITAN	control desk assembly mounting plates	= SH==DOKU	+ P01
			editor	Lo Grasso	Berliner Straße 51-55				
			check.	26.11.13	58332 Schwelm		VS11-H	T13079	Sh. 3
change	date	name	standa	VDE 0100	origin / replace for / replace through		Möllers		3 Sh.

assembly: +L01

front view

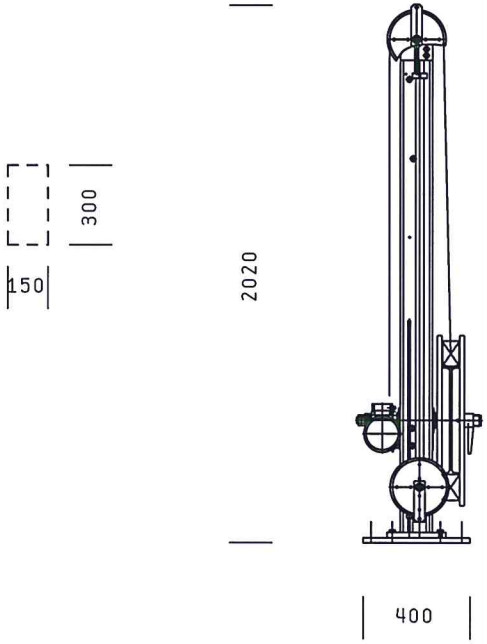

side view from left

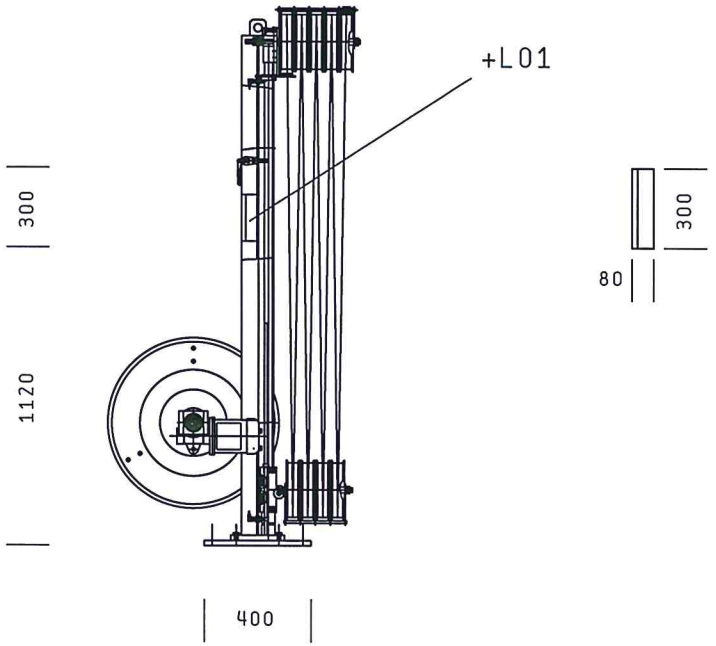

view from top

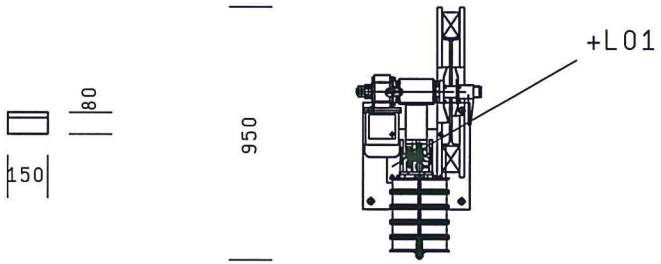

+P01/3

2

			date	26.08.13	Titan Umreifungstechnik	TITAN	Position of terminal box dispenser and tape storage ABS	= SH==DOKU	+L01
			editor	Lo Grasso	Berliner Straße 51-55		VS11-H	T13079	Sh. 1
			check.	26.11.13	58332 Schwelm				2 Sh.
change	date	name	standa	VDE 0100	origin / replace for / replace through		Möllers		

assembly: +L01

control elements legend

pushbutton

dummy plug

front view

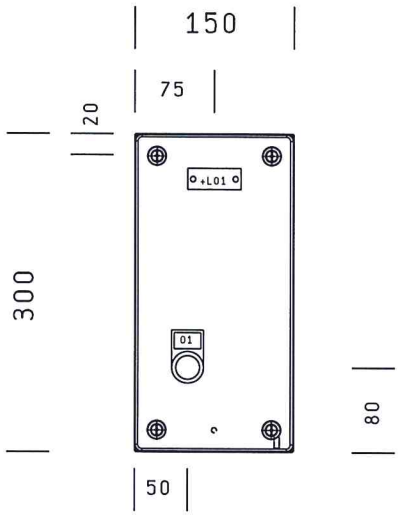

side view from left

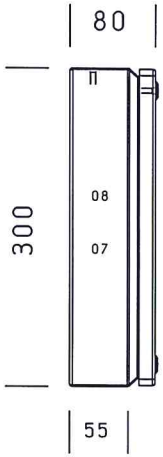

assembly from top

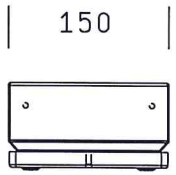

pos.-no.	bmk	description	color
1			
2			
3			
4	=L01-S54	dispenser step by step	black
5			
6			
7	=D02-X3	terminal rail	
8	=L01-X15	terminal rail	

1

+L10/1

			date	26.08.13	Titan Umreifungstechnik	TITAN	Building control point dispenser and tape storage ABS VS11-H	= SH==DOKU / +L01
			editor	Lo Grasso	Berliner Straße 51-55			T13079 / Sh. 2
			check.	26.11.13	58332 Schwelm			2 Sh.
change	date	name	standa	VDE 0100	origin / replace for / replace through		Möllers	

m1:5

assembly: +L10

Rittal AE 1039.500

side view from the right

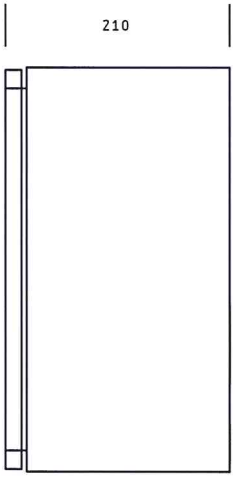

door view

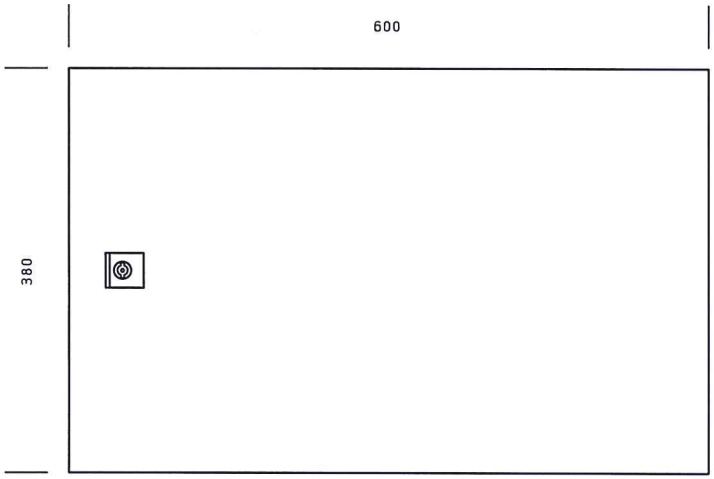

side view from left

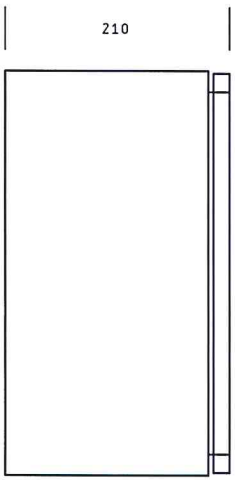

+L01/2

2

			date	26.08.13	Titan Umreifungstechnik	TITAN	terminal box at machine	= SH==DOKU	+L10
			editor	Lo Grasso	Berliner Straße 51-55				
			check.	26.11.13	58332 Schwelm		VS11-H	T13079	Sh. 1
change	date	name	standa	VDE 0100	origin	replace for / replace through	Möllers		3 Sh.

m1:5

assembly: +L10

Rittal AE 1039.500

assembly from top

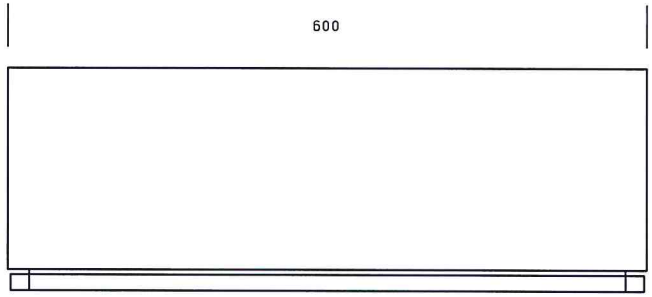

assembly from bottom

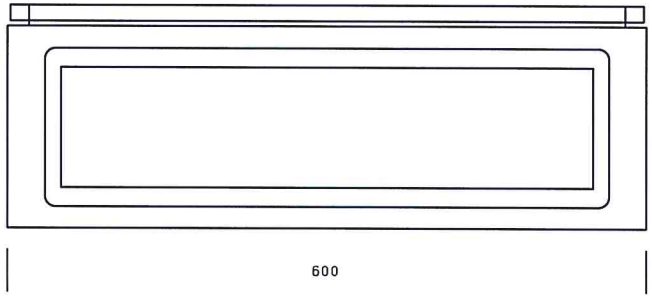

1

3

			date	26.08.13	Titan Umreifungstechnik	TITAN	terminal box at machine	=SH==DOKU	+L10
			editor	Lo Grasso	Berliner Straße 51-55				
			check.	26.11.13	58332 Schwelm		VS11-H	T13079	Sh. 2
change	date	name	standa	VDE 0100	origin	replace for / replace through	Möllers		3 Sh.

m1: 5

assembly: +L10

Rittal AE 1039.500

mounting plate

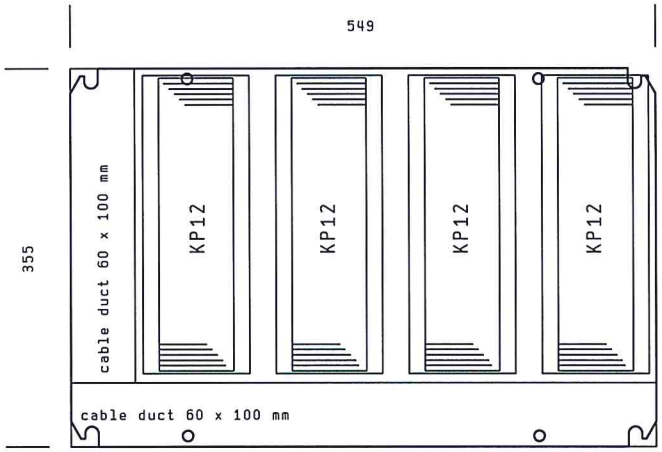

			date	26.08.13	Titan Umreifungstechnik	TITAN	Terminal box mounting plate	= SH==DOKU	+L10		
			editor	Lo Grasso	Berliner Straße 51-55						
			check.	26.11.13	58332 Schwelm		VS11-H	T13079		Sh.	3
change	date	name	standa	VDE 0100	origin	replace for	replace through	Möllers			3 Sh.

assembly: +L18

Rittal AE 1006.600

inside view

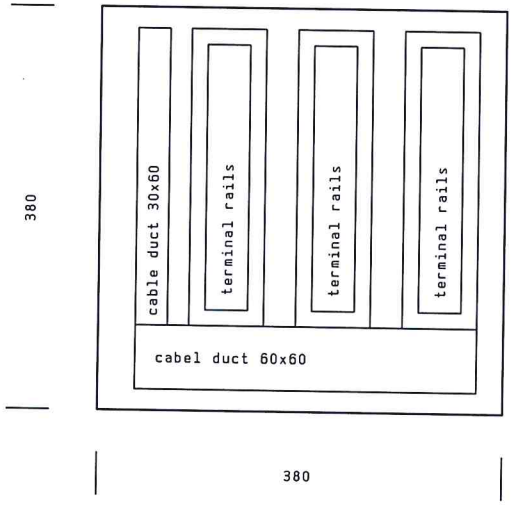

front view

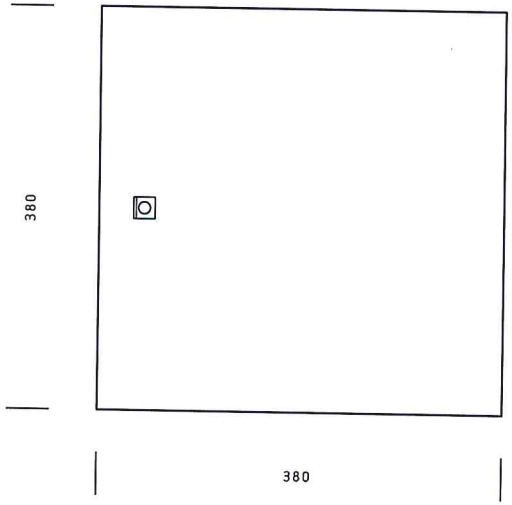

side view from left

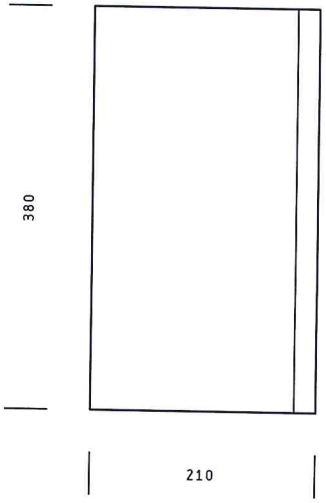

+L10/3

			date	26.08.13	Titan Umreifungstechnik	TITAN	assembly terminal box liftingunit	=SH==DOKU	+L18
			editor	Lo Grasso	Berliner Straße 51-55				
			check.	26.11.13	58332 Schwelm		VS11-H	T13079	Sh. 1
change	date	name	standa	VDE 0100	origin	replace for	replace through	Möllers		1 Sh.

=SH==D01+P01/1

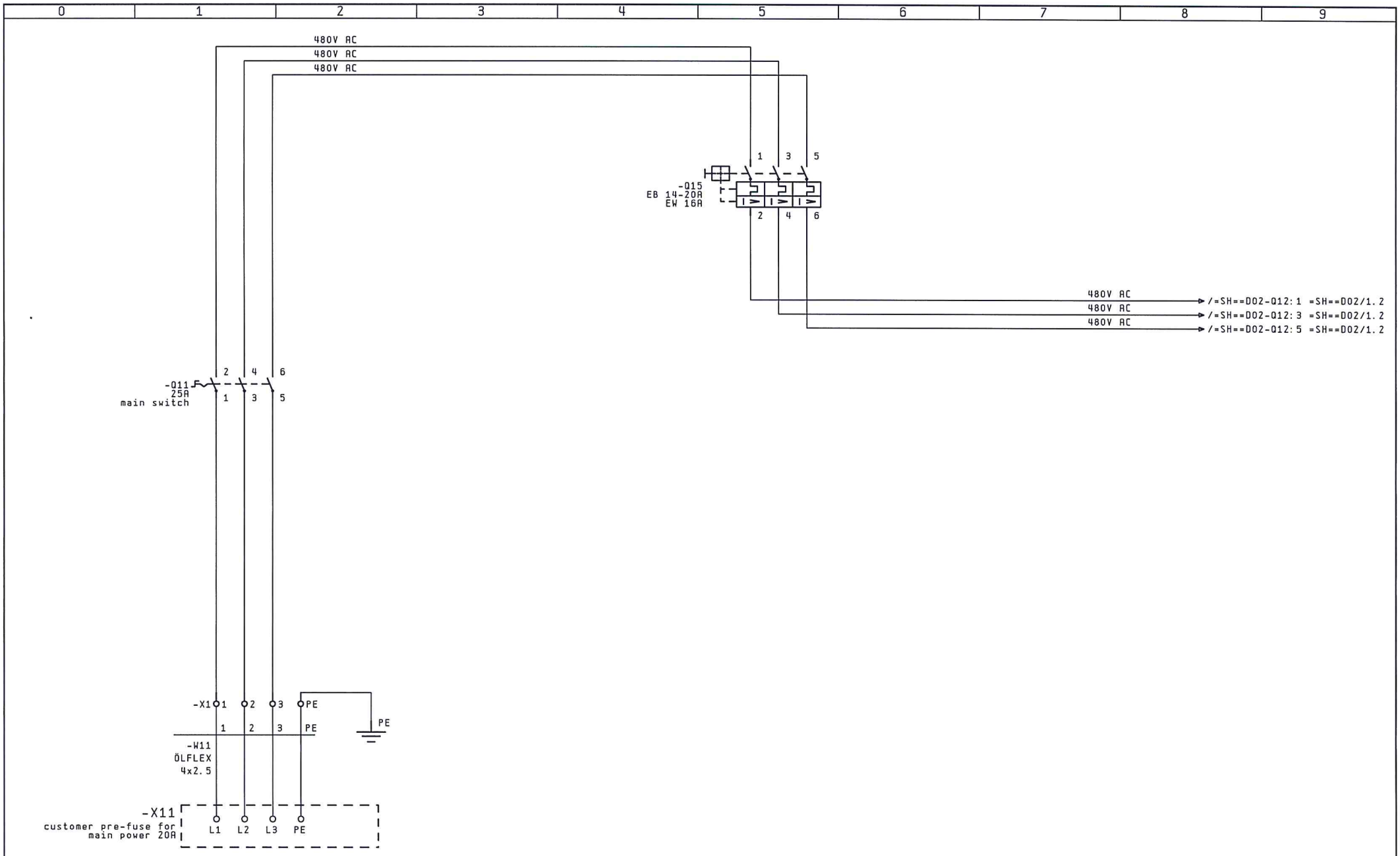

=SH==D0KU+L18/1

=SH==D02/1

			date	26.08.13	Titan Umreifungstechnik	TITAN	power supply	= SH==D01	+ P01		
			editor	Lo Grasso	Berliner Straße 51-55						
			check.	26.11.13	58332 Schwelm		VS11-H	T13079		Sh. 1	
change	date	name	standa	VDE 0100	origin	replace for	replace through	Möllers		1 Sh.	

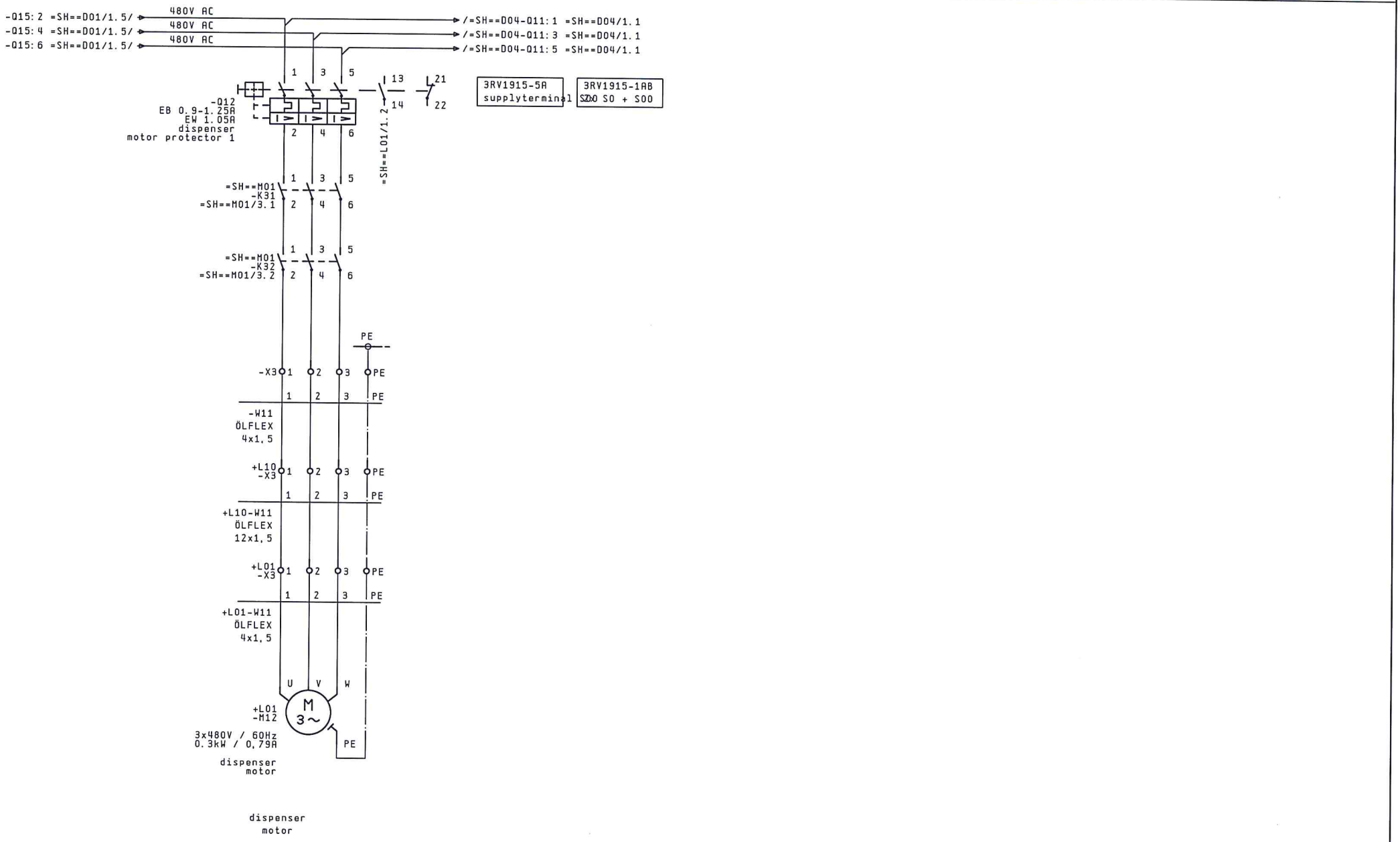
0
1
2
3
4
5
6
7
8
9
-Q15: 2 =SH==D01/1.5/
-Q15: 4 =SH==D01/1.5/
-Q15: 6 =SH==D01/1.5/
480V AC
480V AC
480V AC
/=SH==D04-Q11: 1 =SH==D04/1.1
/=SH==D04-Q11: 3 =SH==D04/1.1
/=SH==D04-Q11: 5 =SH==D04/1.1
3RV1915-5A
supplyterminal
3RV1915-1AB
S00 S0 + S00
-Q12
EB 0.9-1.25A
EW 1.05A
dispenser
motor protector 1
=SH==L01/1.2
=SH==M01
-K31
=SH==M01/3.1
=SH==M01
-K32
=SH==M01/3.2
PE
-X3
-W11
ÖLFLEX
4x1,5
+L10
-X3
+L10-W11
ÖLFLEX
12x1,5
+L01
-X3
+L01-W11
ÖLFLEX
4x1,5
U
V
W
M
3~
+L01
-M12
3x480V / 60Hz
0.3kW / 0,79A
dispenser
motor
dispenser
motor
=SH==D01/1
=SH==D04/1
date 26.08.13
editor Lo Grasso
check. 26.11.13
change
date
name
standa
VDE 0100
Titan Umreifungstechnik
Berliner Straße 51-55
58332 Schwelm
TITAN
origin
replace for
replace through
dispenser
VS11-H
Möllers
= SH==D02
+ P01
T13079
Sh. 1
1 Sh.

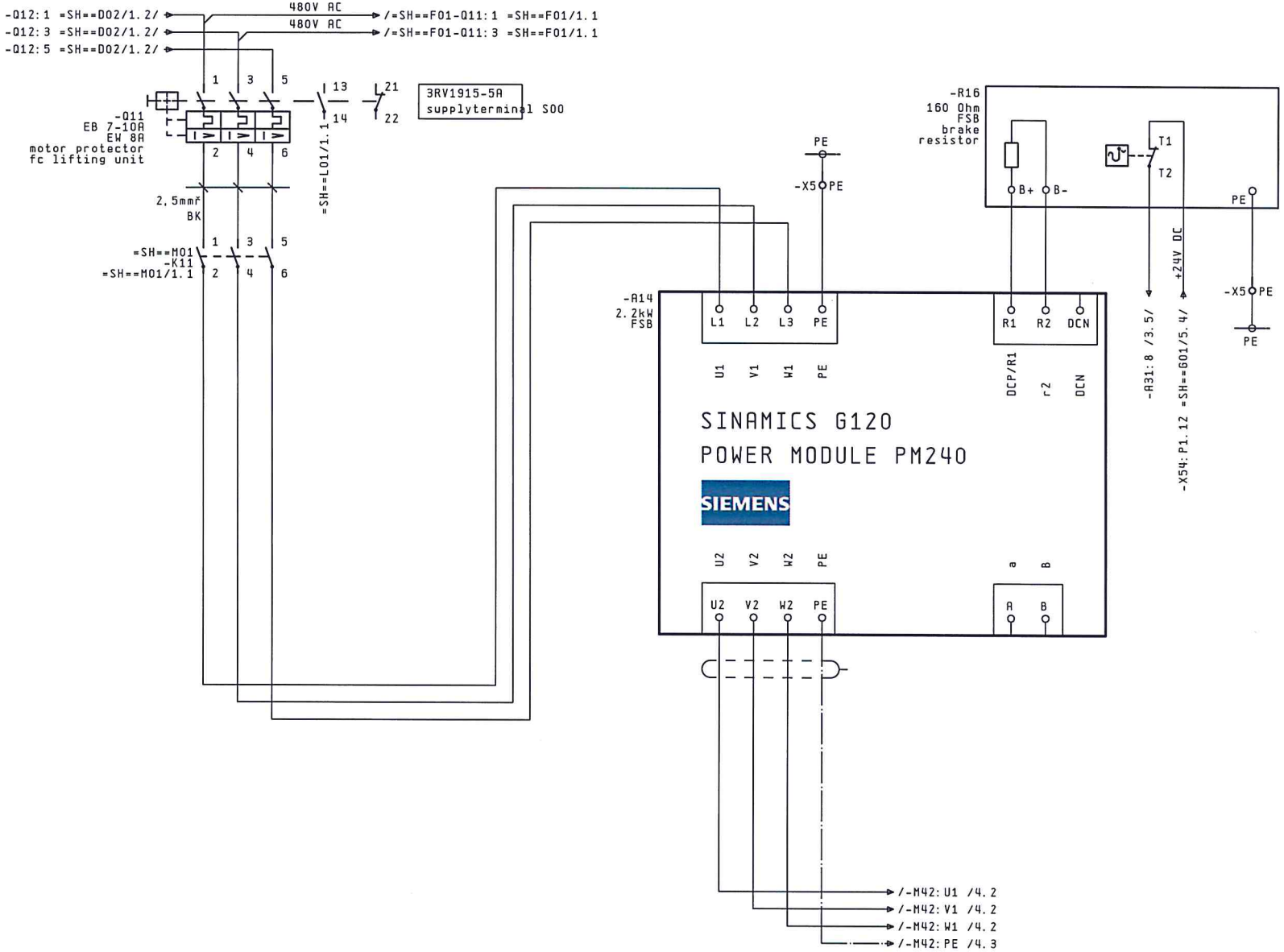

=SH==D02/1

2

			date	26.08.13	Titan Umreifungstechnik	TITAN	lifting drive / Power Module	= SH==D04	+ P01		
			editor	Lo Grasso	Berliner Straße 51-55						
			check.	26.11.13	58332 Schwelm		VS11-H	T13079		Sh. 1	
change	date	name	standa	VDE 0100	origin	replace for	replace through	Möllers			5 Sh.

permanent voltage

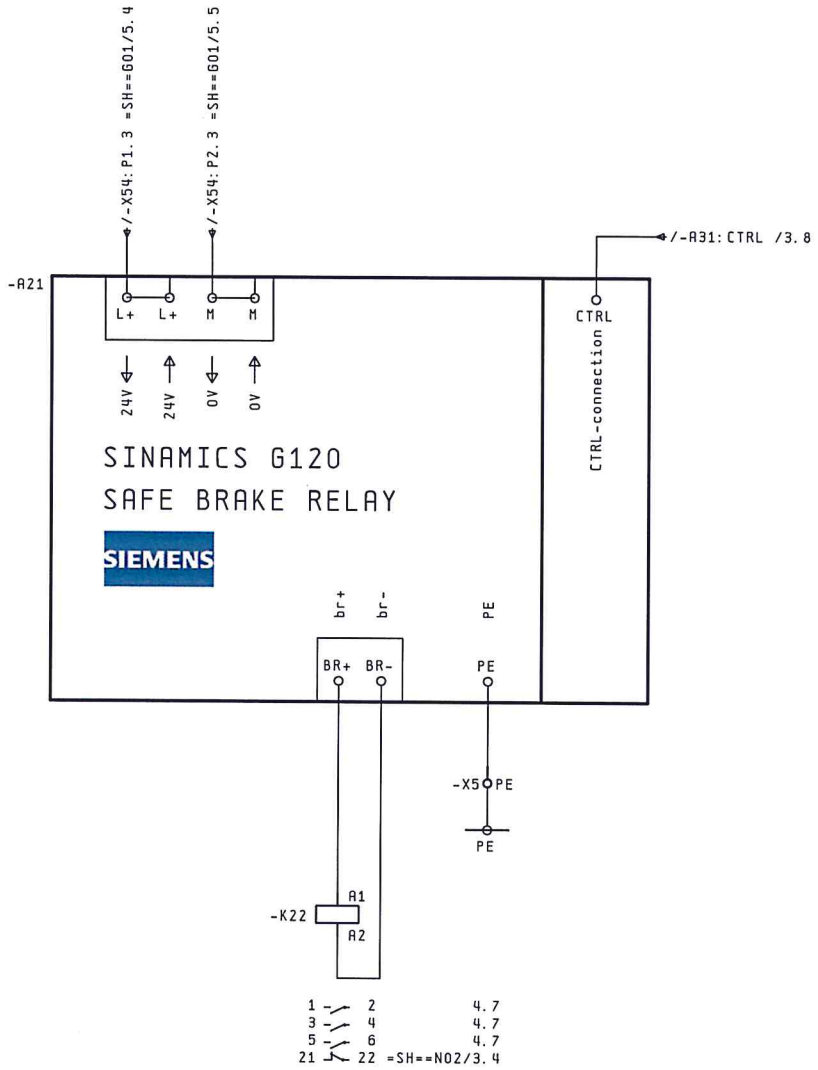

fc lifting
unit
brake contactor

1

3

			date	26.08.13	Titan Umreifungstechnik		lifting drive / Safe Brake Relay	= SH==D04	+ P01
			editor	Lo Grasso	Berliner Straße 51-55	TITAN			
			check.	26.11.13	58332 Schwelm		VS11-H	T13079	Sh. 2
change	date	name	standa	VDE 0100	origin	replace for / replace through	Möllers		5 Sh.

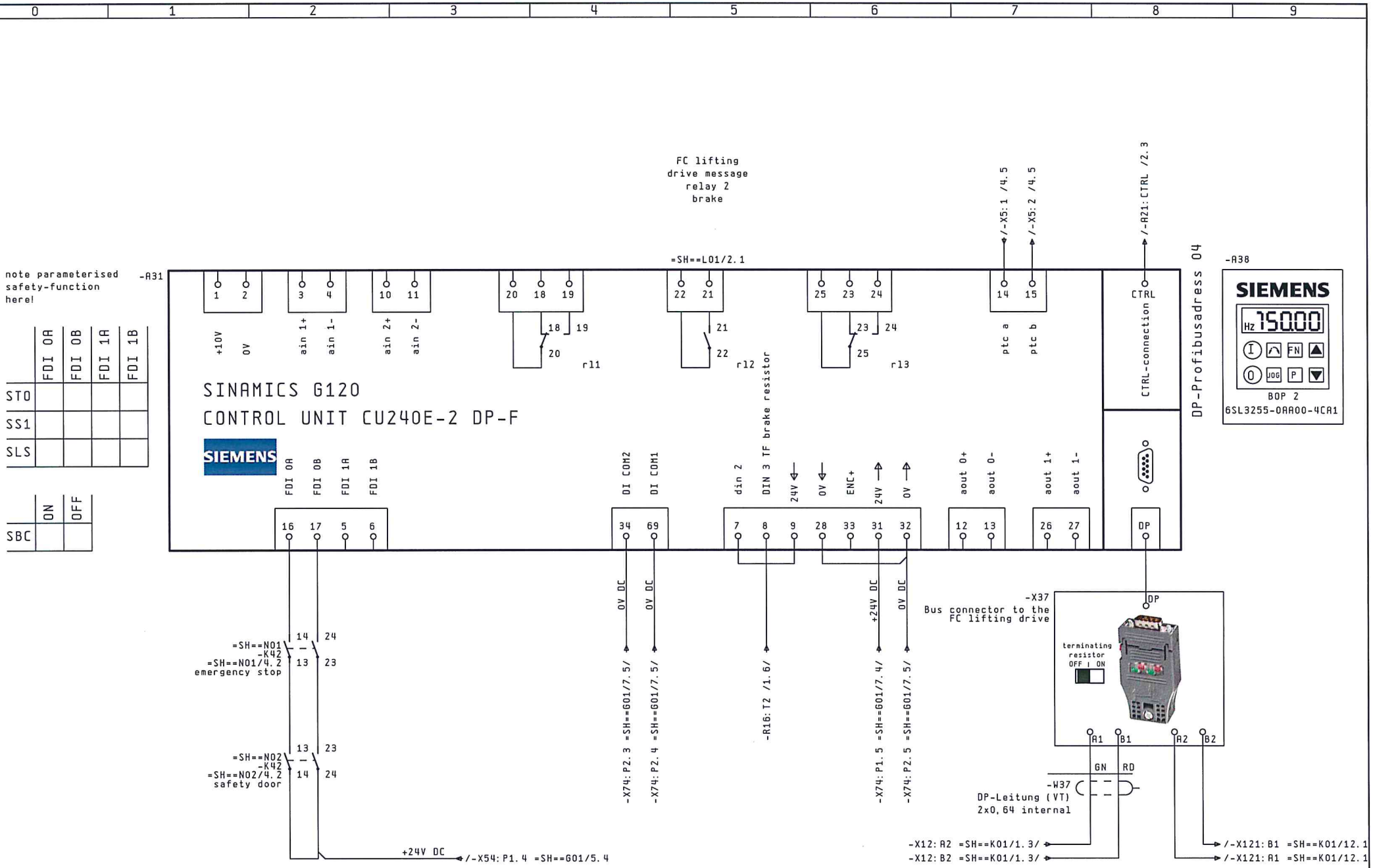

			date	26.08.13	Titan Umreifungstechnik	TITAN	lifting drive / Control Unit	= SH==D04	+ P01	
			editor	Lo Grasso	Berliner Straße 51-55					
			check.	26.11.13	58332 Schwelm		VS11-H	T13079		Sh. 3
change	date	name	standa	VDE 0100	origin	replace for	replace through	Möllers		5 Sh.

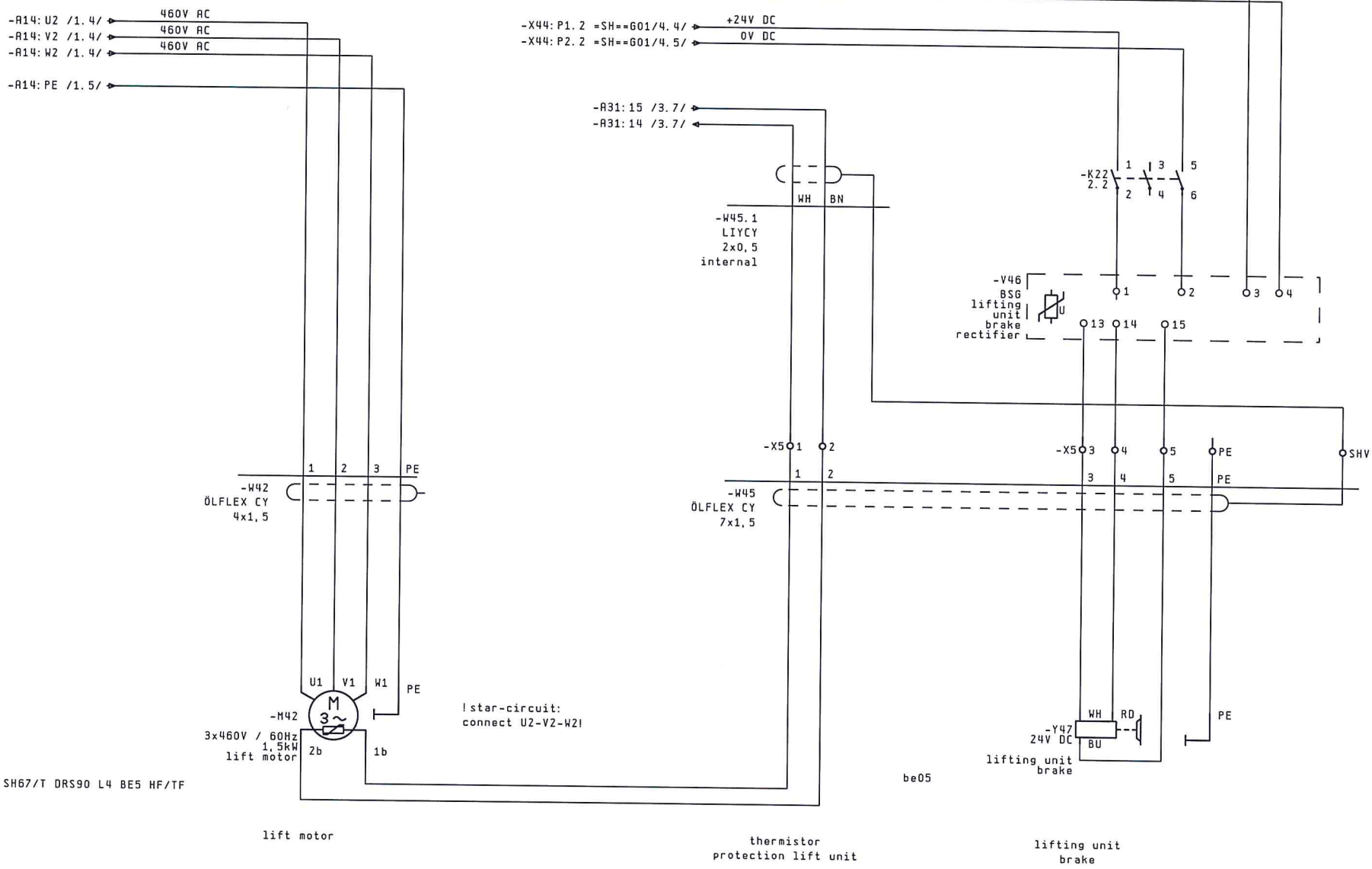

			date	26.08.13	Titan Umreifungstechnik		lift motor	= SH==D04	+ P01		
			editor	Lo Grasso	Berliner Straße 51-55	TITAN					
			check.	26.11.13	58332 Schwelm		VS11-H	T13079		Sh. 4	
change	date	name	standa	VDE 0100	origin	replace for	replace through	Möllers			5 Sh.

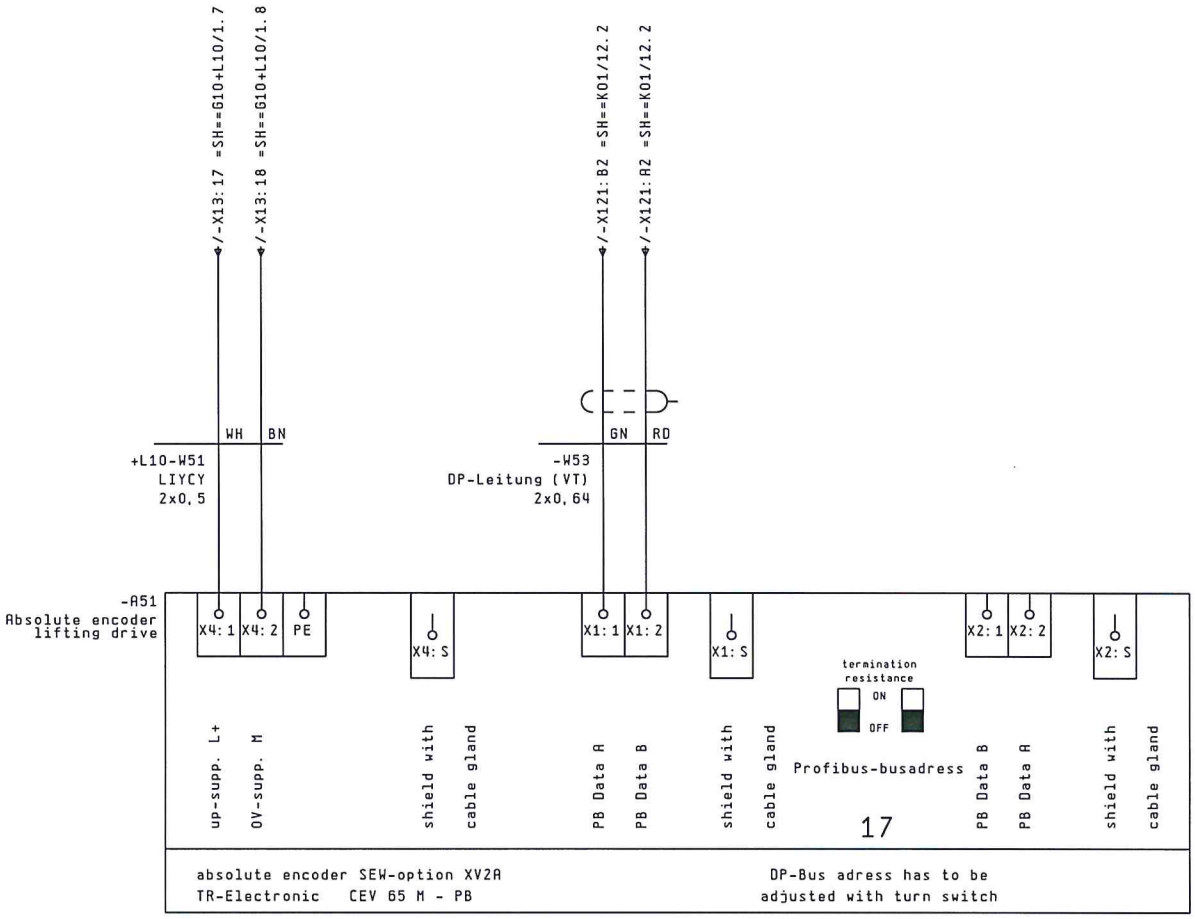

Absolute encoder
lifting drive

4

=SH==F01/1

			date	26.08.13	Titan Umreifungstechnik		lift drive encoder	= SH==D04	+ P01	
			editor	Lo Grasso	Berliner Straße 51-55					
			check.	26.11.13	58332 Schwelm		VS11-H	T13079		Sh. 5
change	date	name	standa	VDE 0100	origin	replace for	replace through	Möllers		5 Sh.

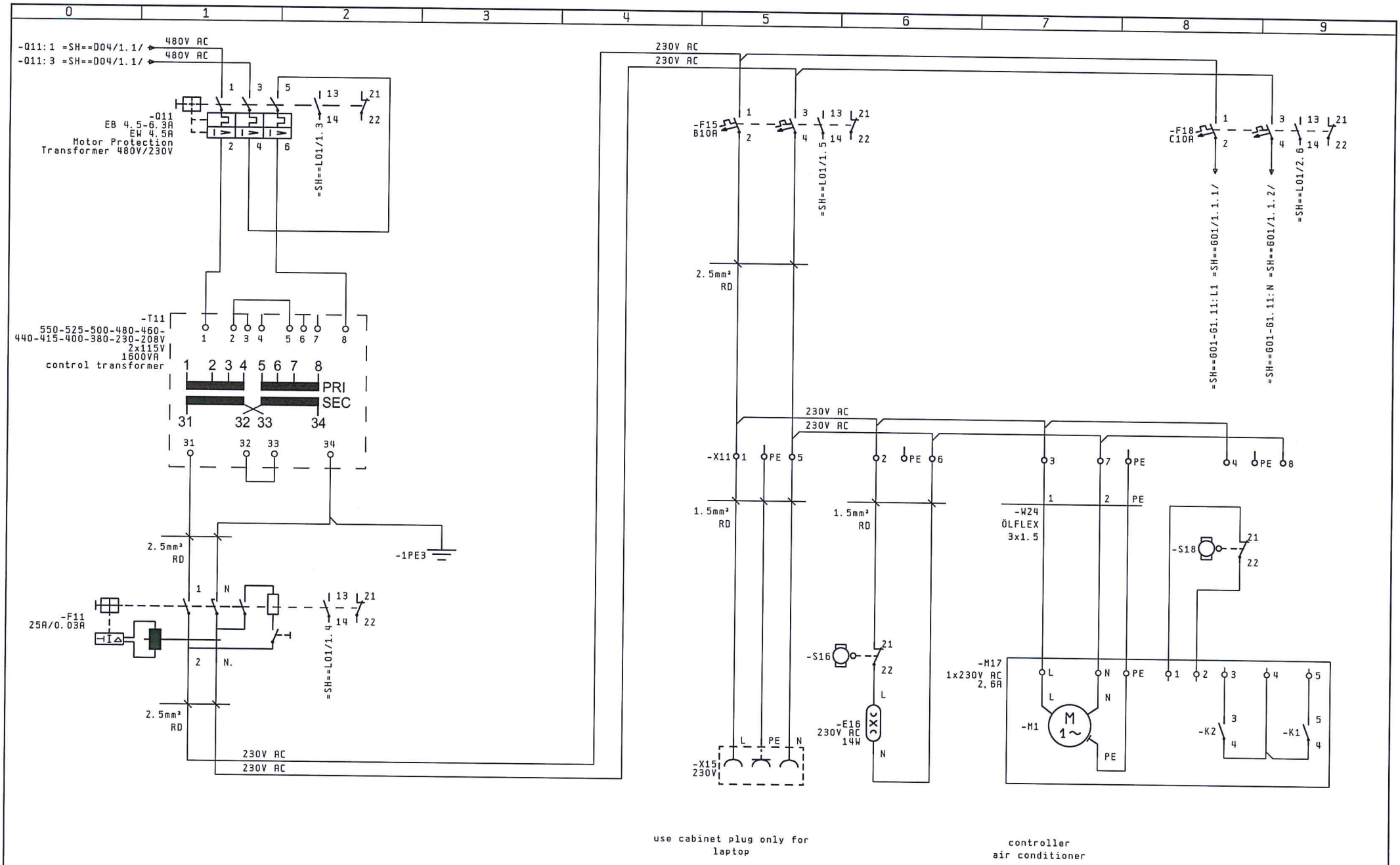

=SH==D04/5

=SH==G01/1

			date	26.08.13	Titan Umreifungstechnik	TITAN	power supply 230V ac	= SH==F01	+ P01	
			editor	Lo Grasso	Berliner Straße 51-55					
			check.	26.11.13	58332 Schwelm		VS11-H	T13079		Sh. 1
change	date	name	standa	VDE 0100	origin	replace for	replace through	Möllers		1 Sh.

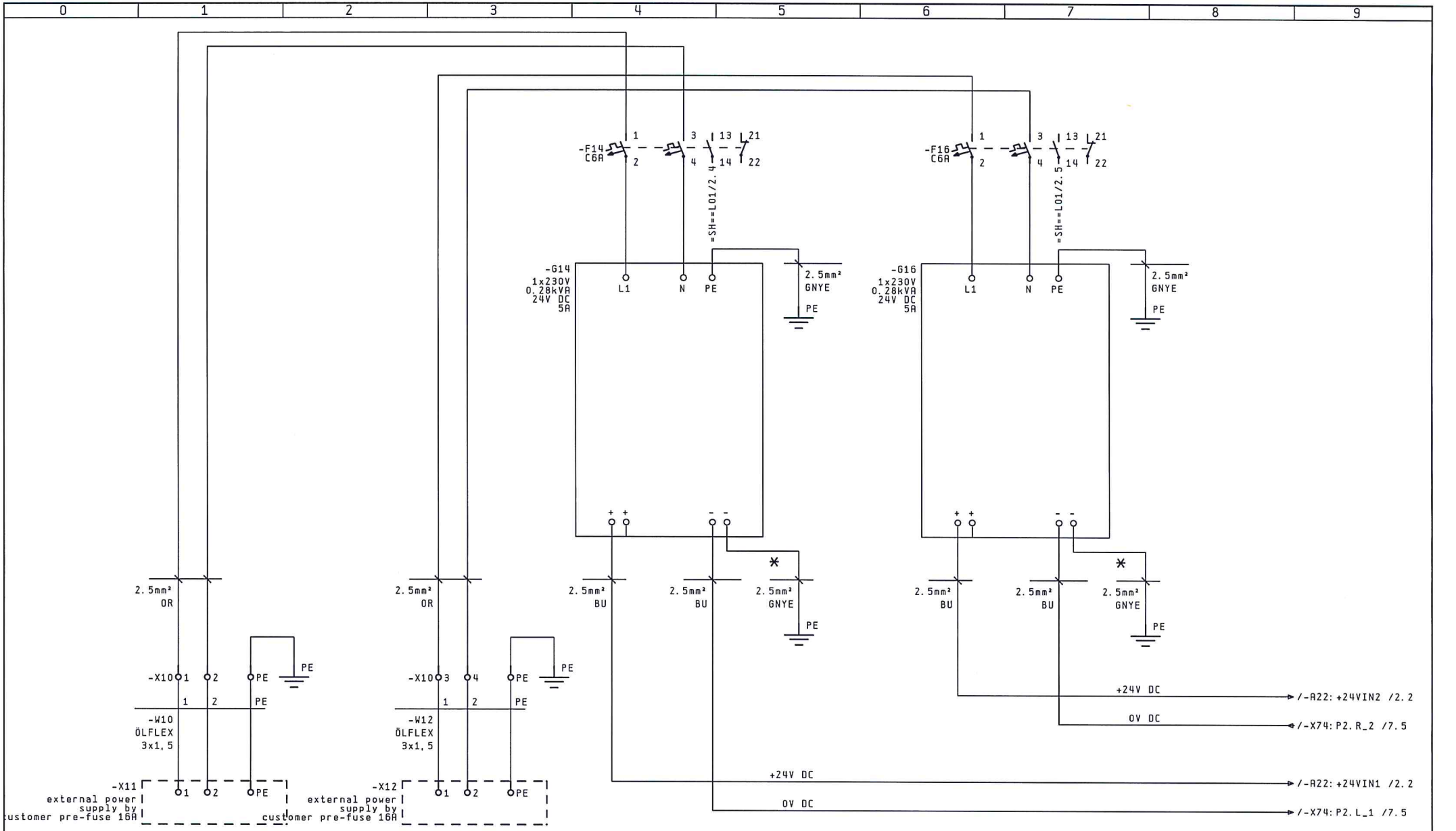

=SH==F01/1

1.1

			date	26.08.13	Titan Umreifungstechnik		power supply 24V dc	= SH==G01	+ P01		
			editor	Lo Grasso	Berliner Straße 51-55						
			check.	26.11.13	58332 Schwelm		VS11-H	T13079		Sh.	1
change	date	name	standa	VDE 0100	origin	replace for	replace through	Möllers			8 Sh.

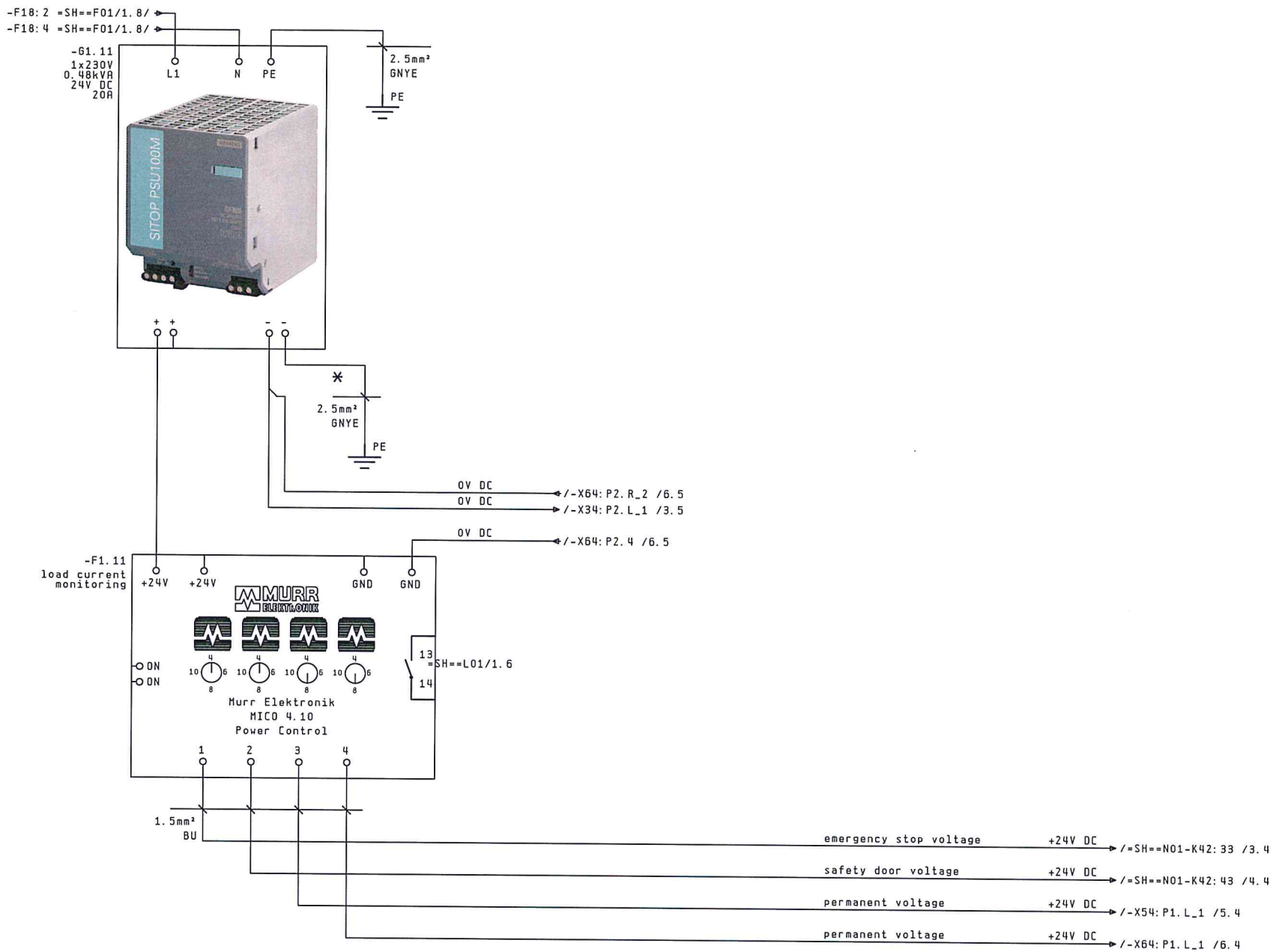

* removing this conection you have to install an isolation supervision according to the VDE 0113.

			date	26.08.13	Titan Umreifungstechnik		power supply 24V dc	= SH==G01	+ P01	
			editor	Lo Grasso	Berliner Straße 51-55	TITAN				
			check.	26.11.13	58332 Schwelm		VS11-H	T13079		Sh. 1.1
change	date	name	standa	VDE 0100	origin	replace for	replace through	Möllers			8 Sh.

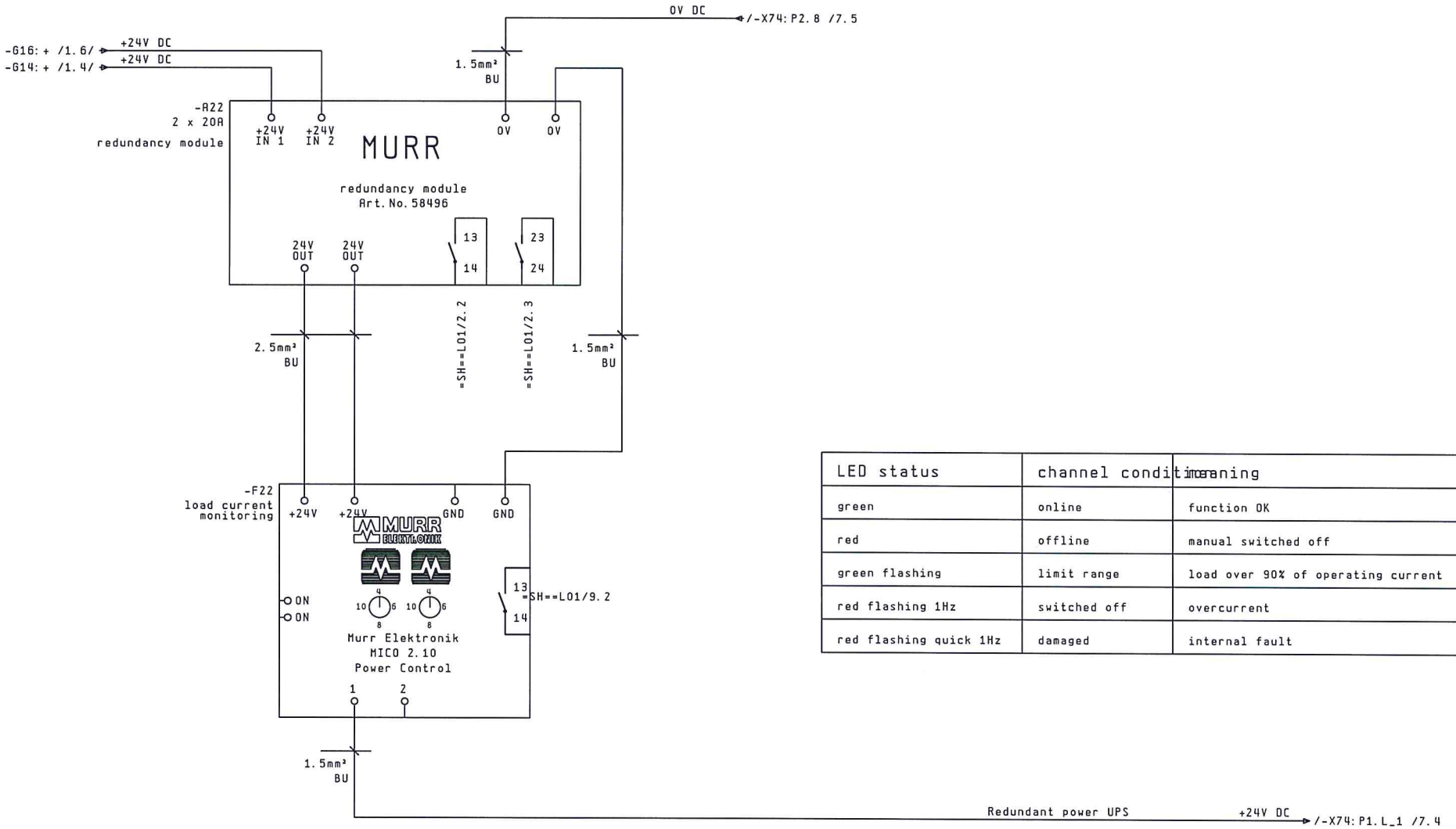

LED status	channel condition	meaning
green	online	function OK
red	offline	manual switched off
green flashing	limit range	load over 90% of operating current
red flashing 1Hz	switched off	overcurrent
red flashing quick 1Hz	damaged	internal fault

1.1

3

			date	26.08.13	Titan Umreifungstechnik	TITAN	power supply 24V dc	= SH==G01	+ P01	
			editor	Lo Grasso	Berliner Straße 51-55					
			check.	26.11.13	58332 Schwelm		VS11-H	T13079		Sh. 2
change	date	name	standa	VDE 0100	origin	replace for	replace through	Möllers		8 Sh.

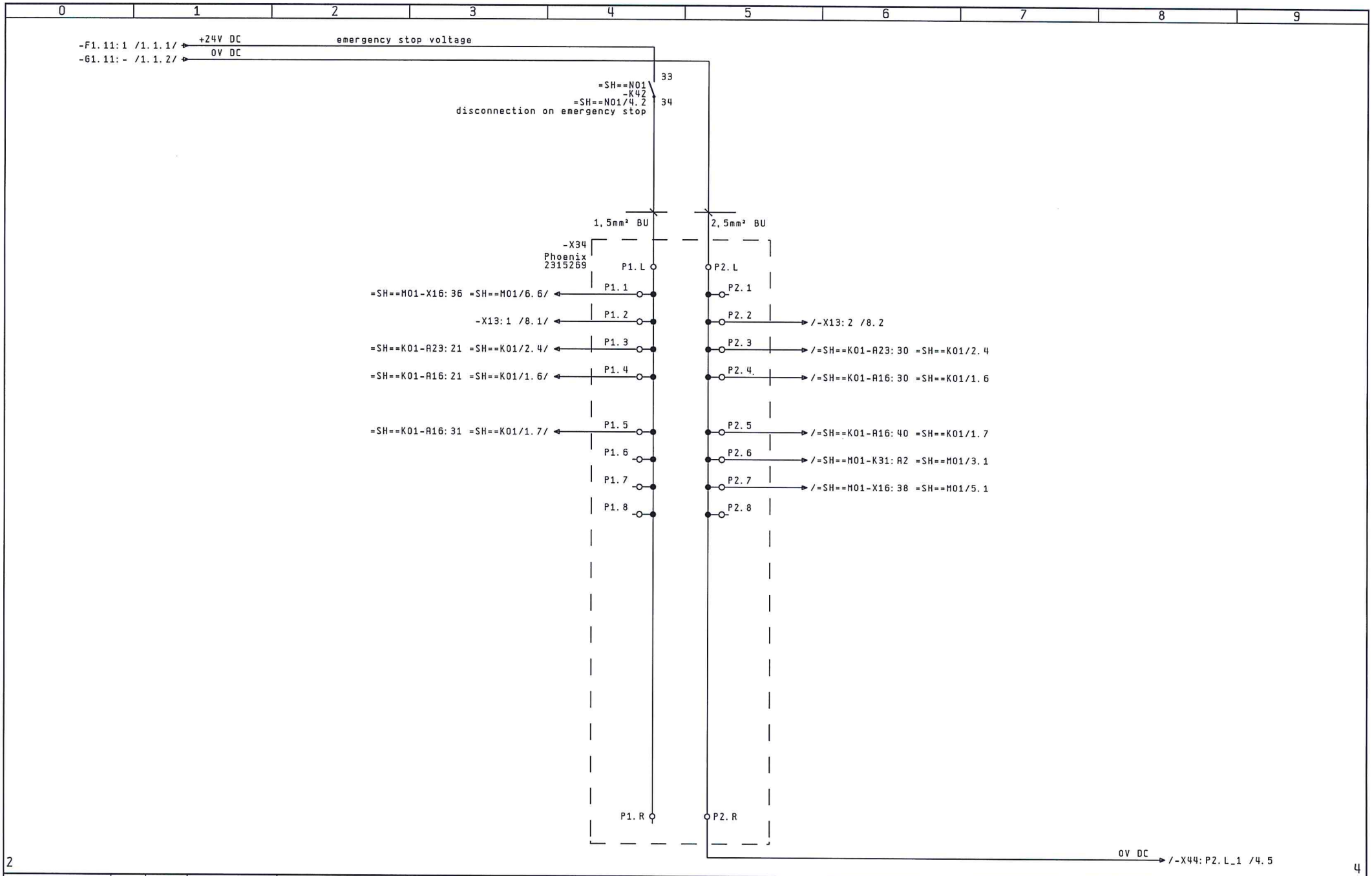

			date	26.08.13	Titan Umreifungstechnik	TITAN	power supply 24V DC via emergency stop	= SH==G01	+ P01		
			editor	Lo Grasso	Berliner Straße 51-55						
			check.	26.11.13	58332 Schwelm		VS11-H	T13079		Sh.	3
change	date	name	standa	VDE 0100	origin	replace for	replace through	Möllers			8 Sh.

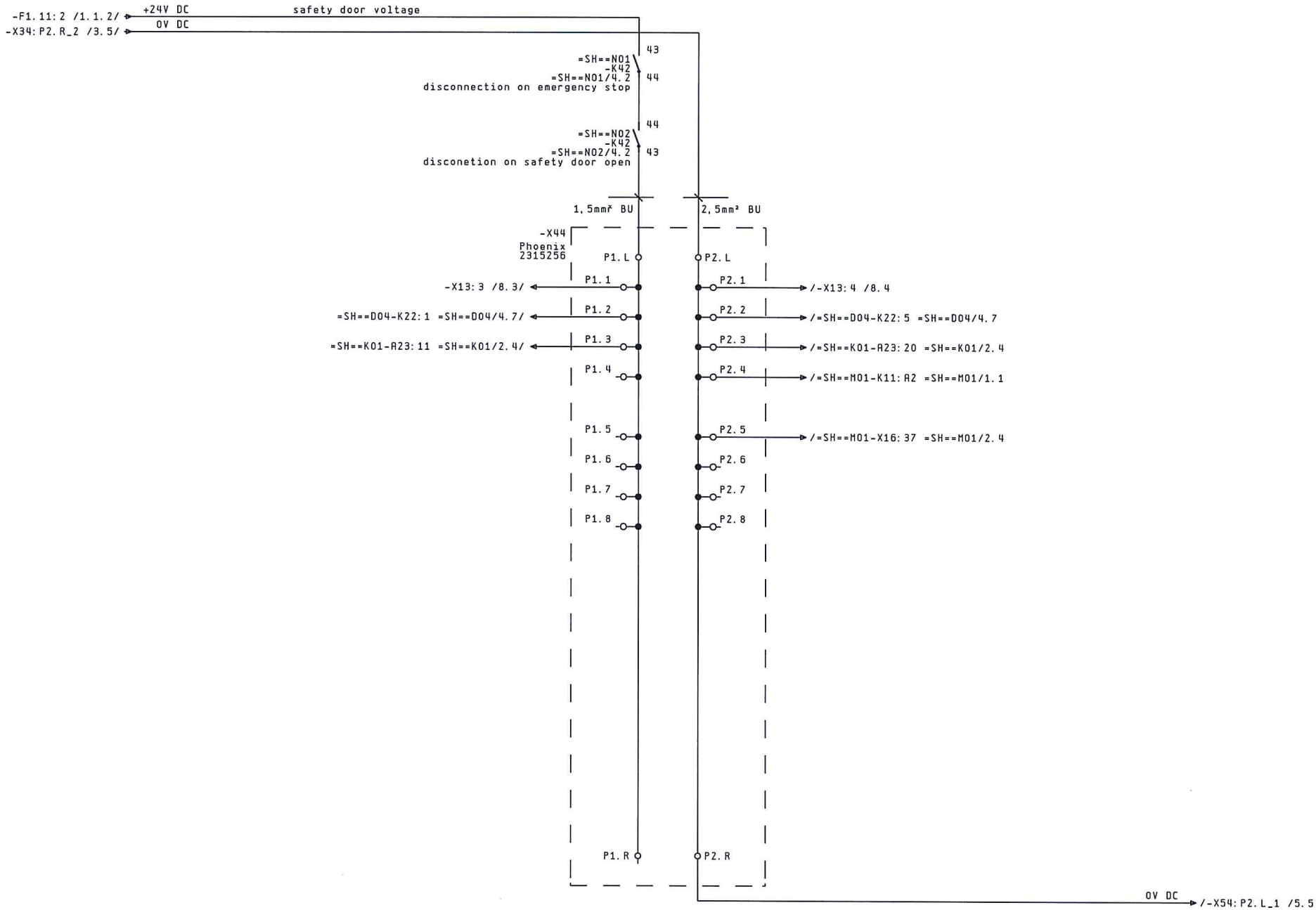

			date	26.08.13	Titan Umreifungstechnik		power supply 24V DC via emergency stop	= SH==G01	+ P01		
			editor	Lo Grasso	Berliner Straße 51-55	TITAN	and safety door				
			check.	26.11.13	58332 Schwelm		VS11-H	T13079		Sh.	4
change	date	name	standa	VDE 0100	origin	replace for	replace through	Möllers			8 Sh.

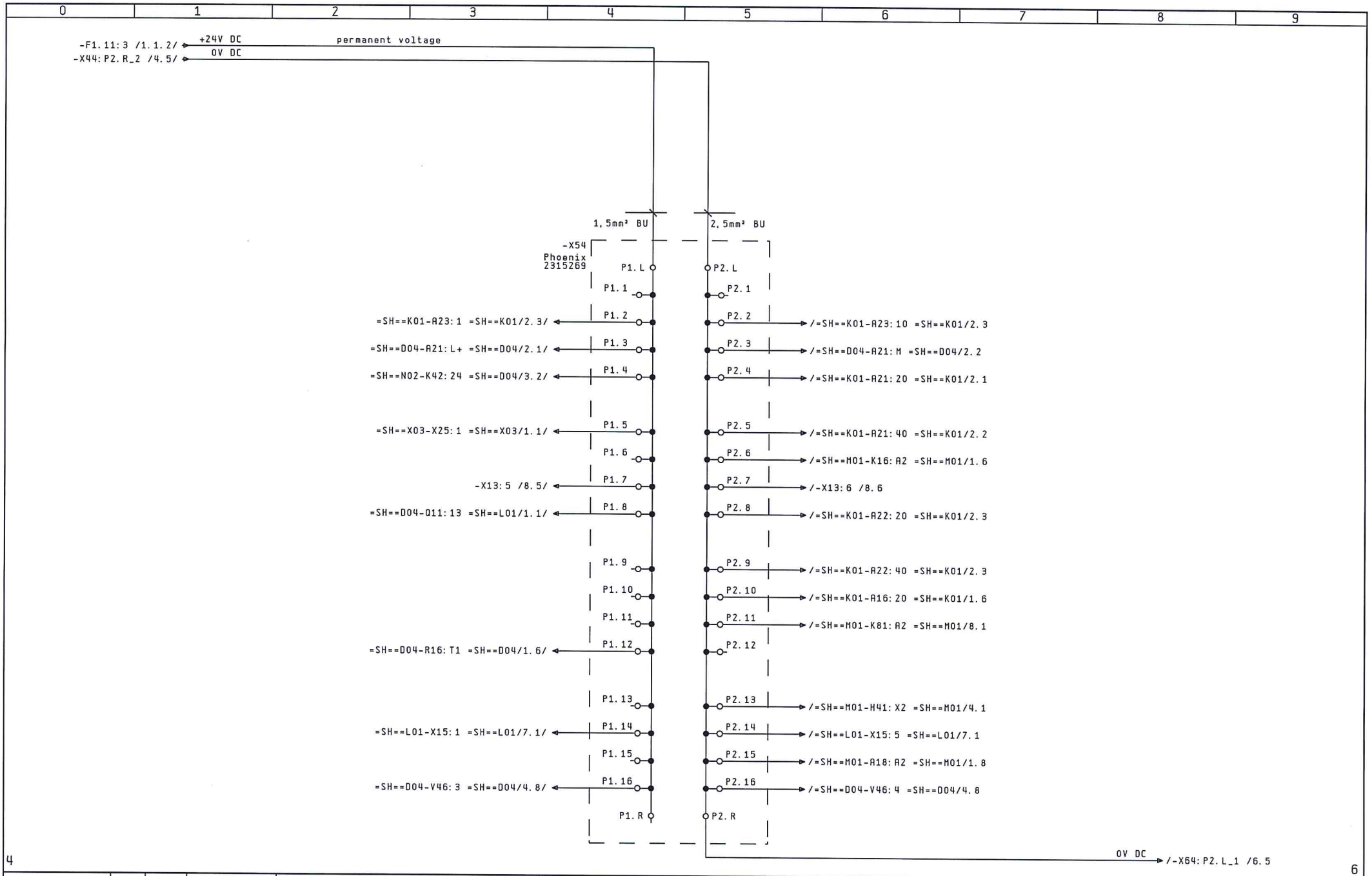

			date	26.08.13	Titan Umreifungstechnik	TITANO	power supply 24V dc	= SH==G01	+ P01
			editor	Lo Grasso	Berliner Straße 51-55				
			check.	26.11.13	58332 Schwelm		VS11-H	T13079	Sh. 5
change	date	name	standa	VDE 0100	origin	replace for	replace through	Möllers		8 Sh.

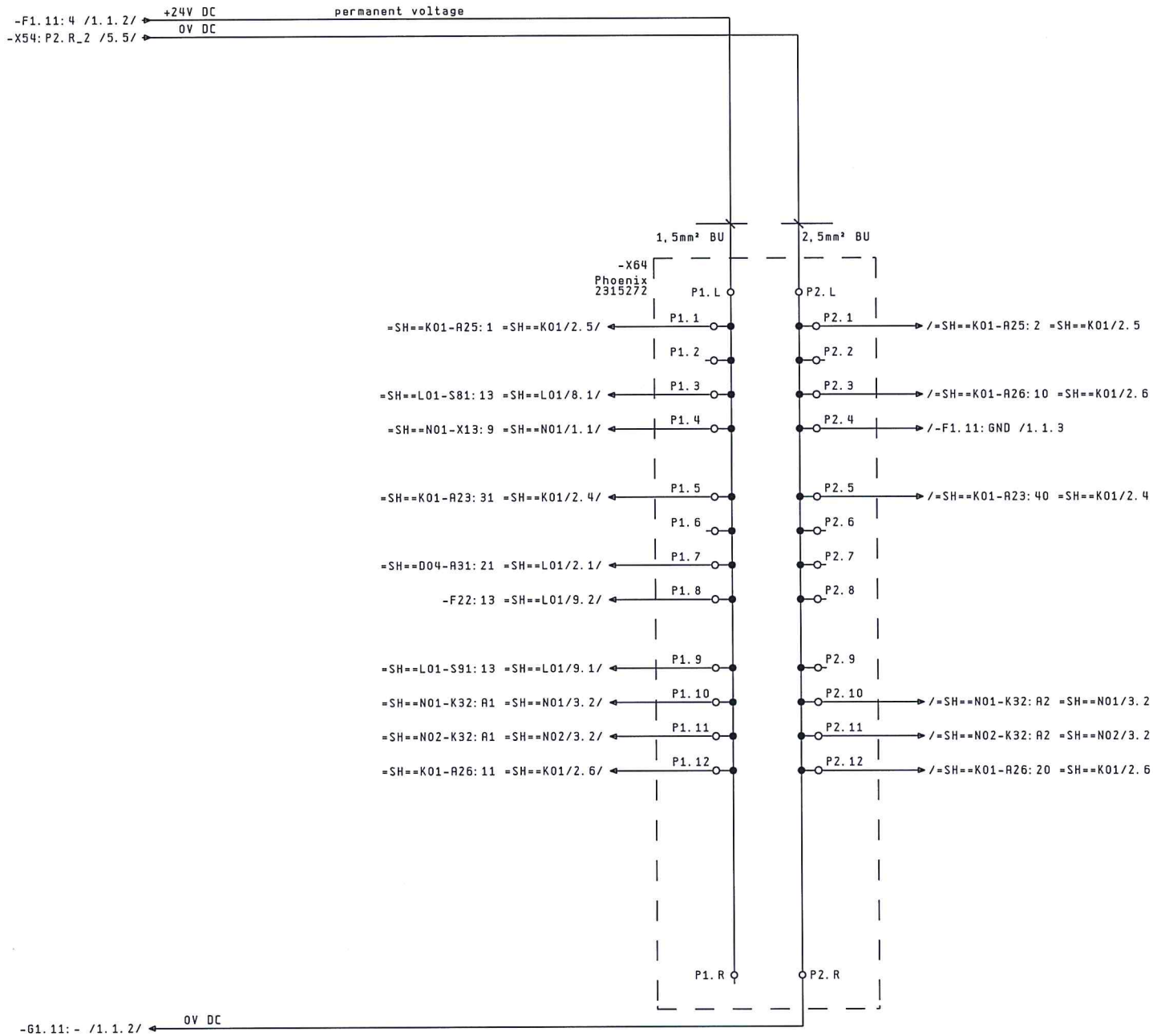

change	date	name	standa	VDE 0100	origin	replace for	replace through
			date	26.08.13			
			editor	Lo Grasso			
			check.	26.11.13			

Titan Umreifungstechnik
Berliner Straße 51-55
58332 Schwelm

TITAN

power supply 24V dc

VS11-H

Möllers

= SH==G01 | + P01

T13079

Sh. 6
8 Sh.

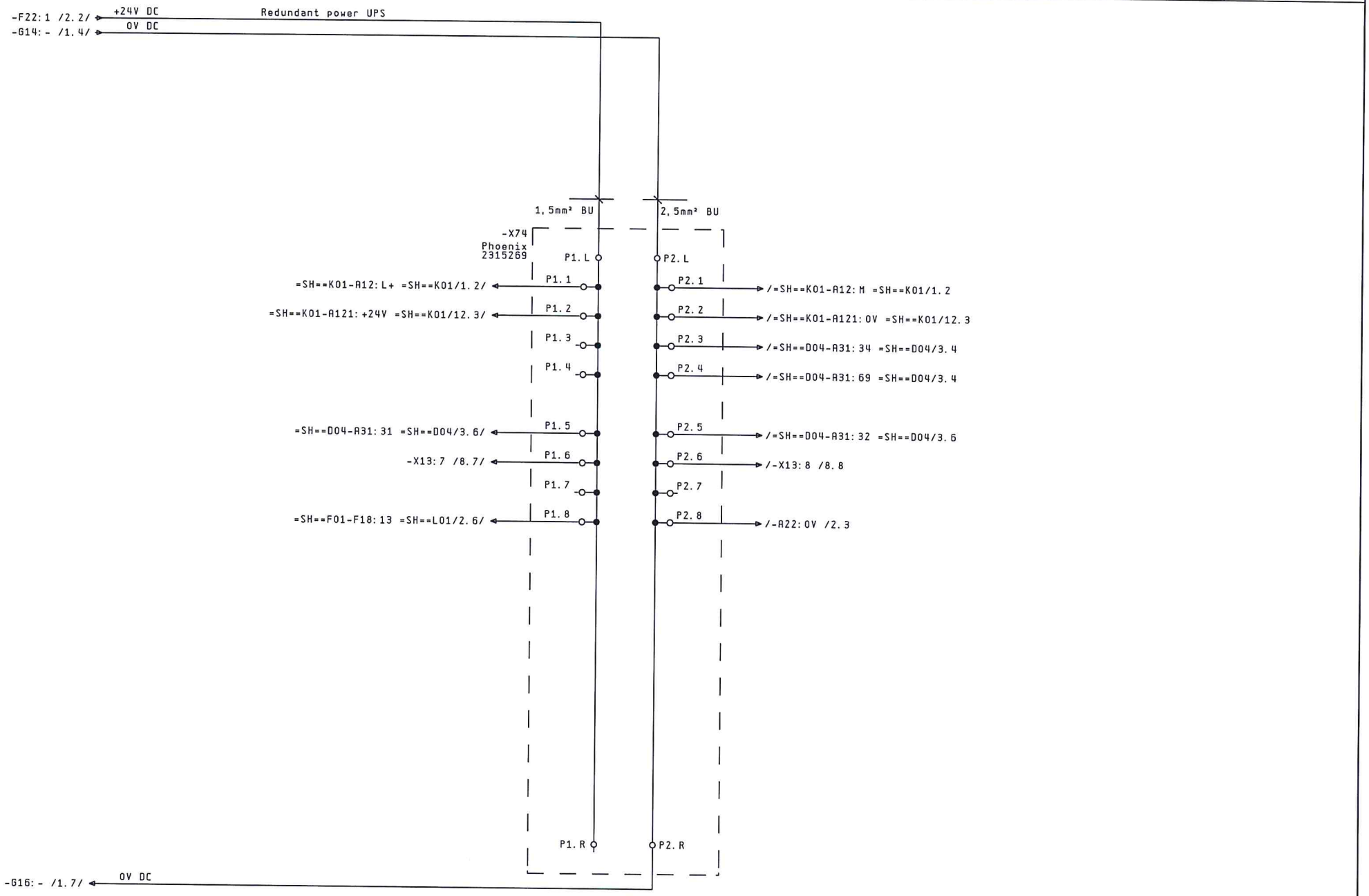

			date	26. 08. 13	Titan Umreifungstechnik	TITAN	power supply 24V dc ups	= SH==G01	+ P01		
			editor	Lo Grasso	Berliner Straße 51-55						
			check.	26. 11. 13	58332 Schwelm		VS11-H	T13079		Sh. 7	
change	date	name	standa	VDE 0100	origin	replace for	replace through	Möllers			8 Sh.

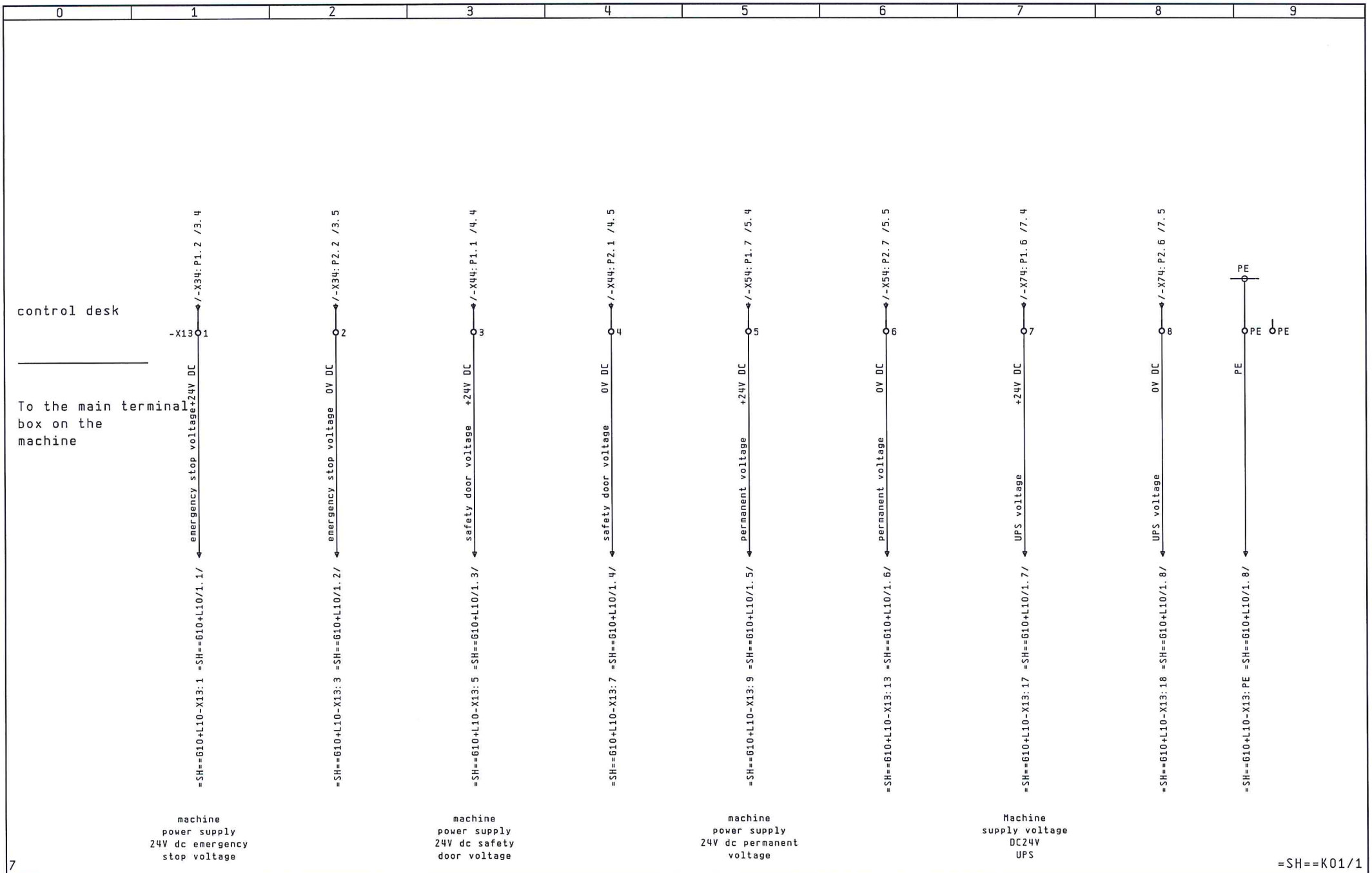

			date	26.08.13	Titan Umreifungstechnik		power supply 24V dc / to the	= SH==G01	+ P01		
			editor	Lo Grasso	Berliner Straße 51-55	TITAN	main terminal housing				
			check.	26.11.13	58332 Schwelm		VS11-H	T13079		Sh.	8
change	date	name	standa	VDE 0100	origin	replace for	replace through	Möllers			8 Sh.

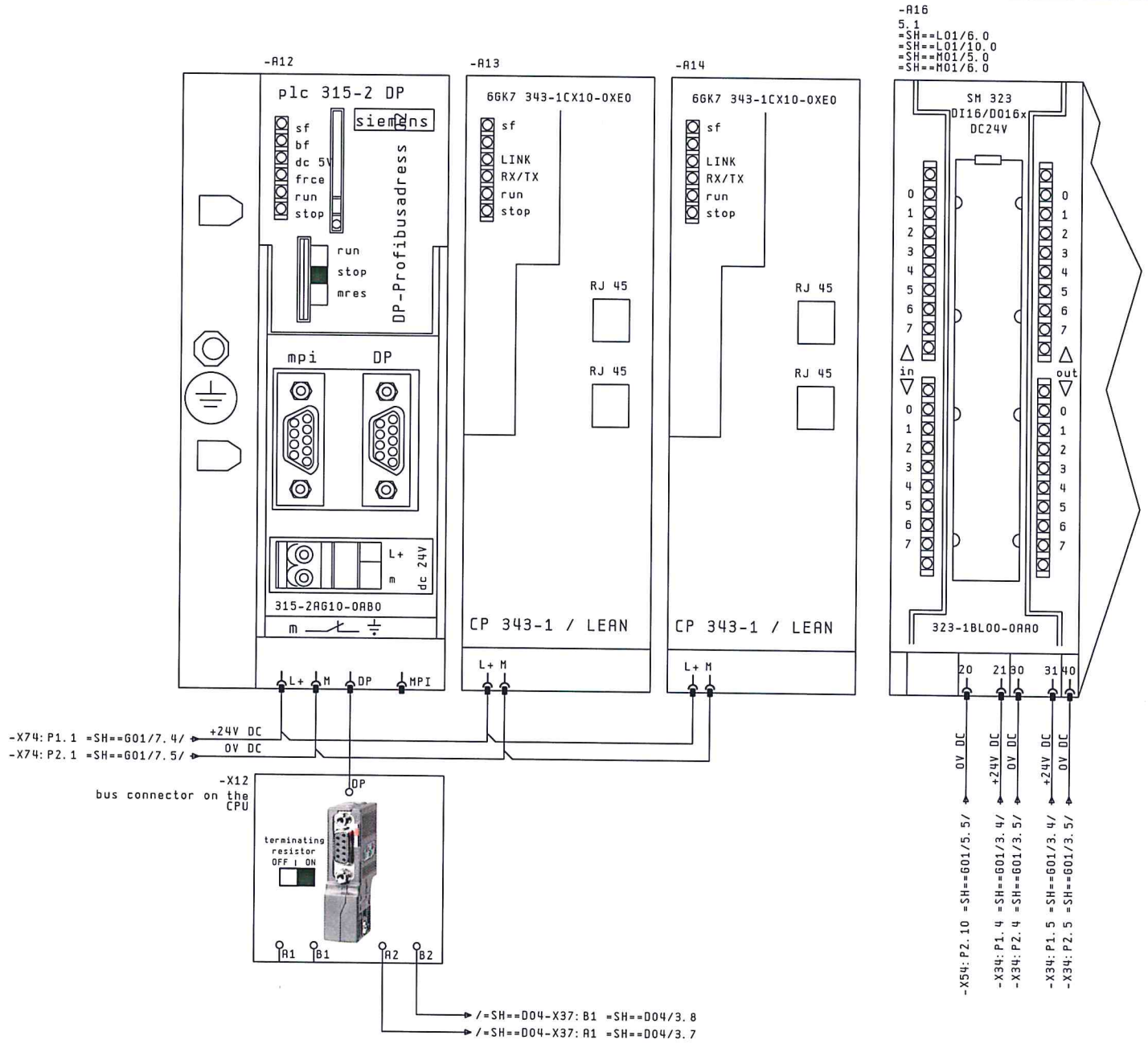

=SH==G01/8

2

			date	26.08.13	Titan Umreifungstechnik	TITAN	assembly s7-300	= SH==K01	+ P01
			editor	Lo Grasso	Berliner Straße 51-55		rack	T13079	Sh. 1
			check.	26.11.13	58332 Schwelm		VS11-H		12 Sh.
change	date	name	standa	VDE 0100	origin	replace for	replace through	Möllers	

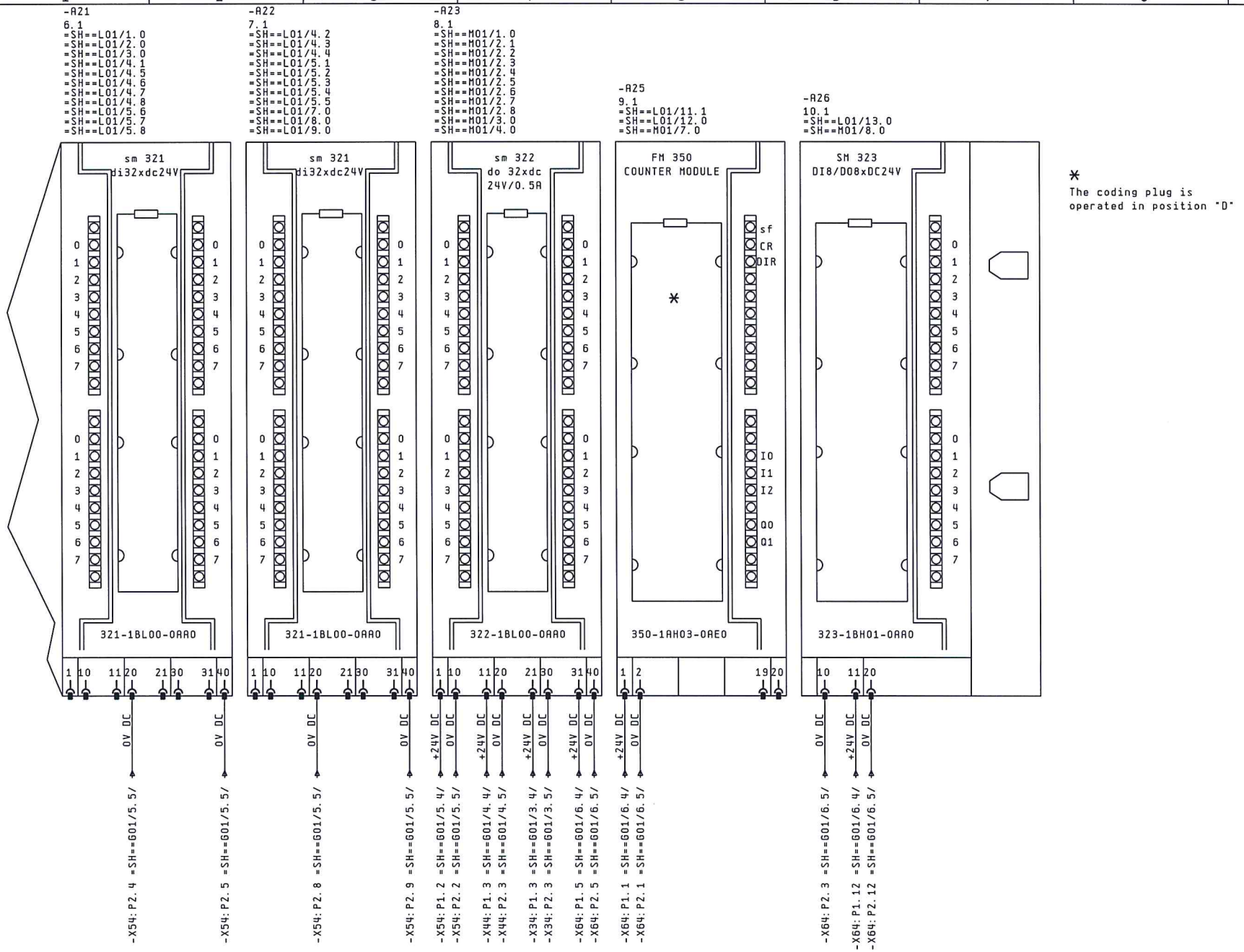

			date	26.08.13	Titan Umreifungstechnik	TITAN	assembly s7-300	= SH==K01	+ P01		
			editor	Lo Grasso	Berliner Straße 51-55		rack				
			check.	26.11.13	58332 Schwelm		VS11-H	T13079		Sh. 2	
change	date	name	standa	VDE 0100	origin	replace for	replace through	Möllers		12 Sh.	

0	1	2	3	4	5	6	7	8	9

2

5

			date	26.08.13	Titan Umreifungstechnik	TITAN	reserve	= SH==K01	+ P01		
			editor	Lo Grasso	Berliner Straße 51-55						
			check.	26.11.13	58332 Schwelm		VS11-H	T13079			Sh. 3
change	date	name	standa	VDE 0100	origin	replace for	replace through	Möllers			12 Sh.

-A16
1.6

siemens

6ES7 313-6CF03-0AB0

	E2.0 2	=SH==L01/6.1	=SH==L01+L18-B61:4	strap catch arm 1 basic position inlet left
	.1 3	=SH==L01/6.2	=SH==L01+L18-B62:4	strap catch arm 1 for coil inlet left
	.2 4	=SH==L01/6.3	=SH==L01+L18-B63:4	strap catch arm 2 basic position outlet right
	.3 5	=SH==L01/6.4	=SH==L01+L18-B64:4	strap catch arm 2 to the coil outlet right
	.4 6	=SH==L01/6.5	=SH==L01+L18-S65:14	strapping head rear home position
	.5 7	=SH==L01/6.6	=SH==L01+L18-S65:22	strapping head rear home position
	.6 8	=SH==L01/6.7	=SH==L01+L18-B67:4	strapping head in front
	.7 9	=SH==L01/6.8	=SH==L01+L18-X15:46	reserve
	E3.0 12	=SH==L01/10.1	=SH==L01+L19-S101:14	VS11L service - switch sealing B10
	.1 13	=SH==L01/10.2	=SH==L01+L19-XK1:10	VS11L reserve
	.2 14	=SH==L01/10.3	=SH==L01+L19-XK1:11	VS11L reserve
	.3 15	=SH==L01/10.4	=SH==L01-X15:61	VS11L reserve
	.4 16	=SH==L01/10.5	=SH==L01-X15:62	VS11L reserve
	.5 17	=SH==L01/10.6	=SH==L01-X15:63	reserve
	.6 18	=SH==L01/10.7	=SH==L01-X15:64	reserve
	.7 19	=SH==L01/10.8	=SH==L01-X15:65	reserve
emergency stop voltage	A2.0 22	=SH==M01/5.1	=SH==M01+L19-Y51:A1	VS11L air valve middle Y1
	.1 23	=SH==M01/5.2	=SH==M01+L19-Y52:A1	VS11L air valve quick Y2
	.2 24	=SH==M01/5.3	=SH==M01+L19-Y53:A1	VS11L transport motor forward Y3
	.3 25	=SH==M01/5.4	=SH==M01+L19-Y54:A1	VS11L transport motor backward Y4
	.4 26	=SH==M01/5.5	=SH==M01+L19-Y55:A1	VS11L sealing motor Y5
	.5 27	=SH==M01/5.6	=SH==M01+L19-Y56:A1	VS11L tensioning motor Y6
	.6 28	=SH==M01/5.7	=SH==M01+L19-Y57:A1	VS11L transport slide Y7
	.7 29	=SH==M01/5.8	=SH==M01+L19-Y58:A1	VS11L straightening device Y8
emergency stop voltage	A3.0 32	=SH==M01/6.1	=SH==M01+L19-Y61:A1	VS11L strap stop cylinder Y9
	.1 33	=SH==M01/6.2	=SH==M01+L19-Y62:A1	VS11L tensioning slide pressed Y16
	.2 34	=SH==M01/6.3	=SH==M01+L19-Y63:A1	VS11L open flap Y17
	.3 35	=SH==M01/6.4	=SH==M01+L19-Y64:A1	VS11L close flap Y18
	.4 36	=SH==M01/6.5	=SH==M01-X16:32	VS11L reserve
	.5 37	=SH==M01/6.6	=SH==M01-X16:33	VS11L reserve
	.6 38	=SH==M01/6.7	=SH==M01-X16:34	VS11L reserve
	.7 39	=SH==M01/6.8	=SH==M01-X16:35	VS11L reserve

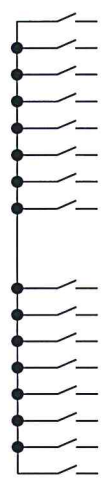

16 digital inputs, 24VDC
16 digital outputs, 24VDC

3 6

			date	26.08.13	Titan Umreifungstechnik	TITAN	Occupancy	= SH==K01	+ P01
			editor	Lo Grasso	Berliner Straße 51-55		digital input / digital output		
			check.	26.11.13	58332 Schwelm		VS11-H	T13079	Sh. 5
change	date	name	standa	VDE 0100	origin / replace for / replace through		Möllers		12 Sh.

-A21
2.1

siemens

6ES7 321-1BL00-0AA0

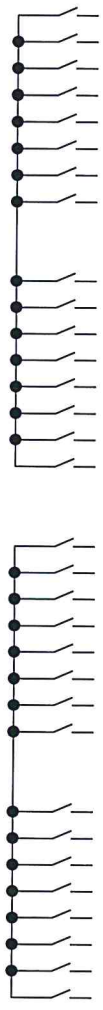

E4.0	2	=SH==L01/1.1	=SH==D04-Q11:14	motor protector fc lifting unit
.1	3	=SH==L01/1.2	=SH==D02-Q12:14	dispenser motor protector
.2	4	=SH==L01/1.3	=SH==F01-Q11:14	Motor Protection Transformer 480V/230V
.3	5	=SH==L01/1.4	=SH==F01-F11:14	FI-safetyswitch power supply 230C AC
.4	6	=SH==L01/1.5	=SH==F01-F15:14	fuse external supply 230V AC
.5	7	=SH==L01/1.6	=SH==G01-F1.11:14	SITOP select diagnosis module 4 channel
.6	8	=SH==L01/1.7	=SH==N01-K32:34	emergency stop module on
.7	9	=SH==L01/1.8	=SH==N02-K32:24	safety door module on
E5.0	12	=SH==L01/2.1	=SH==G01-X64:P1.7	fc lift unit message brake on
.1	13	=SH==L01/2.2	-A21:E5.0	redundancy module Input 1
.2	14	=SH==L01/2.3	-A21:E5.1	redundancy module Input 2
.3	15	=SH==L01/2.4	=SH==G01-F14:14	Redundancy power supply unit 1
.4	16	=SH==L01/2.5	=SH==G01-F16:14	Redundancy power supply unit 2
.5	17	=SH==L01/2.6	=SH==F01-F18:14	Power supply unit 20A
.6	18	=SH==L01/2.7	=SH==N01-S11:32	emergency stop in the control desk
.7	19	=SH==L01/2.8	=SH==N01-S11:31	reverse emergency stop
E6.0	22	=SH==L01/3.1	=SH==L01+L10-S31:14	lifting unit home position
.1	23	=SH==L01/3.2	=SH==L01+L10-S31:22	lifting unit home position
.2	24	=SH==L01/3.3	=SH==L01+L10-B33:4	pin lifting unit
.3	25	=SH==L01/3.4	=SH==L01+L10-B34:2	lifting unit downward stop
.4	26	=SH==L01/3.5	=SH==L01+L10-S35:2	VS11 unit pressure switch air pressure <4 bar
.5	27	=SH==L01/3.6	=SH==L01+L10-X15:38	reserve
.6	28	=SH==L01/3.7	=SH==L01+L10-X15:39	reserve
.7	29	=SH==L01/3.8	=SH==L01+L10-X15:40	reserve
E7.0	32	=SH==L01/4.1	=SH==L01+L01-B41:4	strap accumulator full
.1	33	=SH==L01/5.6	=SH==L01+L18-B56:4	Retroreflective sensor outside outlet
.2	34	=SH==L01/5.7	=SH==L01+L18-X15:37	reserve
.3	35	=SH==L01/4.5	=SH==L01+L01-X15:13	strap accumulator reserve
.4	36	=SH==L01/5.8	=SH==L01+L18-X15:38	reserve
.5	37	=SH==L01/4.6	=SH==L01+L01-B46:4	strap accumulator strap low
.6	38	=SH==L01/4.7	=SH==L01+L10-X15:47	reserve
.7	39	=SH==L01/4.8	=SH==L01+L10-S48:2	Main stop valve pressure switch air pressure = 0 bar

32 digital
inputs, 24VDC

5

7

			date	26.08.13	Titan Umreifungstechnik Berliner Straße 51-55 58332 Schwelm	TITAN	allocation digital intput group VS11-H	= SH==K01	+ P01
			editor	Lo Grasso				T13079	Sh. 6
			check.	26.11.13					12 Sh.
change	date	name	standa	VDE 0100	origin	replace for	replace through	Möllers	

-A22
2.2

siemens

6ES7 321-1BL00-0AA0

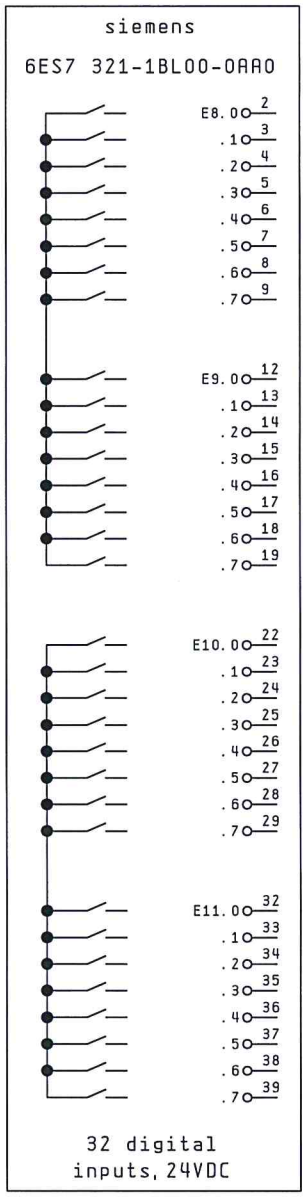

E8.0	2	=SH==L01/5.1	=SH==L01+L18-B51:4	Retroreflective sensor outside the inlet
.1	3	=SH==L01/5.2	=SH==L01+L18-B52:4	Retroreflective sensor inlet inside
.2	4	=SH==L01/5.3	=SH==L01+L18-B53:4	channel arm monitoring the strapping unit
.3	5	=SH==L01/5.4	=SH==L01+L18-B54:4	channel arm monitoring on the boom
.4	6	=SH==L01/5.5	=SH==L01+L18-B55:4	Retroreflective sensor outlet inside
.5	7	=SH==L01/4.2	=SH==L01+L01-B42:4	strap accumulator empty
.6	8	=SH==L01/4.3	=SH==L01+L01-B43:4	strap accumulator end
.7	9	=SH==L01/4.4	=SH==L01+L01-S44:14	fill strap accumulator
E9.0	12	=SH==L01/7.1	=SH==L01+L19-B71:4	VS11L strap stop switch B1
.1	13	=SH==L01/7.2		reserve
.2	14	=SH==L01/7.3	=SH==L01+L19-B73:4	VS11L 0-position B3
.3	15	=SH==L01/7.4	=SH==L01+L19-B74:4	VS11L clamp position B4
.4	16	=SH==L01/7.5	=SH==L01+L19-B75:4	VS11L safety switch flap open B6
.5	17	=SH==L01/7.6	=SH==L01+L18-B76:4	VS11L head before package B7
.6	18	=SH==L01/7.7	=SH==L01+L18-B77:4	VS11L head on package B8
.7	19	=SH==L01/7.8	=SH==L01+L19-B78:14	VS11L service - switch strap insertion B9
E10.0	22	=SH==L01/8.1	=SH==L01-S81:14	control on
.1	23	=SH==L01/8.2	=SH==L01-S82:22	control off
.2	24	=SH==L01/8.3	=SH==L01-S83:14	manual mode
.3	25	=SH==L01/8.4	=SH==L01-S84:14	automatic
.4	26	=SH==L01/8.5	=SH==L01-S85:14	cycle start
.5	27	=SH==L01/8.6	=SH==L01-S86:22	cycle stop
.6	28	=SH==L01/8.7	=SH==L01-S87:14	fault acknowledge
.7	29	=SH==L01/8.8	=SH==L01-S88:14	drive to home position
E11.0	32	=SH==L01/9.1	=SH==L01-S91:14	release transport
.1	33	=SH==L01/9.2	=SH==G01-F22:14	SITOP select diagnosis module 2 channel
.2	34	=SH==L01/9.3	=SH==L01-X15:52	reserve
.3	35	=SH==L01/9.4	=SH==L01-X15:53	reserve
.4	36	=SH==L01/9.5	=SH==L01-X15:54	reserve
.5	37	=SH==L01/9.6	=SH==L01-X15:55	reserve
.6	38	=SH==L01/9.7	=SH==L01-X15:56	reserve
.7	39	=SH==L01/9.8	=SH==L01-X15:57	Request protection door is to be opened

32 digital
inputs, 24VDC

6 8

			date	26.08.13	Titan Umreifungstechnik	TITAN	allocation	= SH==K01	+ P01
			editor	Lo Grasso	Berliner Straße 51-55		digital intput group		
			check.	26.11.13	58332 Schwelm		VS11-H	T13079	Sh. 7
change	date	name	standa	VDE 0100	origin / replace for / replace through		Möllers		12 Sh.

0	1	2	3	4	5	6	7	8	9

-A23
2.3

siemens

6ES7 322-1BL00-0AA0

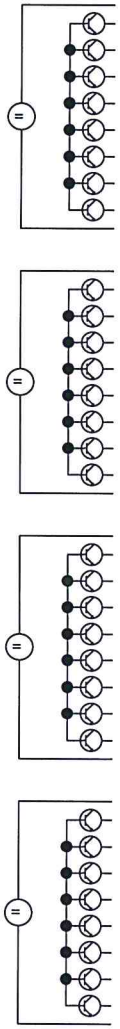

permanent voltage	A12.0 2	=SH==M01/1.1	=SH==M01-K11:A1	lift motor fc contactor
	.1 3	=SH==M01/1.2	=SH==M01-X16:2	reserve
	.2 4	=SH==M01/1.3	=SH==M01-X16:3	reserve
	.3 5	=SH==M01/1.4	=SH==M01-X16:4	reserve
	.4 6	=SH==M01/1.5	=SH==M01-X16:5	reserve
	.5 7	=SH==M01/1.6	=SH==M01-K16:A1	safety door open
	.6 8	=SH==M01/1.7	=SH==M01-X16:6	reserve
	.7 9	=SH==M01/1.8	=SH==M01-A18:A1	strapping counter
safety door voltage	A13.0 12	=SH==M01/2.4	=SH==M01+L10-Y24:A1	compressed air main valve
	.1 13	=SH==M01/2.5	=SH==M01+L18-Y25:A1	Horizontal moving carriage home position
	.2 14	=SH==M01/2.6	=SH==M01+L18-Y26:A1	Horizontal moving carriage in front
	.3 15	=SH==M01/2.7	=SH==M01+L18-Y27:A1	open strap catching arms home position
	.4 16	=SH==M01/2.8	=SH==M01+L18-Y28:A1	strap catch arms closed
	.5 17	=SH==M01/2.1		reserve
	.6 18	=SH==M01/2.2	=SH==M01-X16:7	reserve
	.7 19	=SH==M01/2.3	=SH==M01-X16:8	reserve
emergency stop voltage	A14.0 22	=SH==M01/3.1	=SH==M01-K31:A1	dispenser contactor
	.1 23	=SH==M01/3.2		dispenser contactor
	.2 24	=SH==M01/3.3	=SH==M01-X16:14	reserve
	.3 25	=SH==M01/3.4	=SH==M01-X16:15	reserve
	.4 26	=SH==M01/3.5	=SH==M01-X16:16	reserve
	.5 27	=SH==M01/3.6	=SH==M01-X16:17	reserve
	.6 28	=SH==M01/3.7	=SH==M01+L10-Y37:A1	VS11 strapping head
	.7 29	=SH==M01/3.8	=SH==M01+L18-Y38:A1	strap clamp open/close
permanent voltage	A15.0 32	=SH==M01/4.1	=SH==M01-H41:X1	control on
	.1 33	=SH==M01/4.2	=SH==M01-H42:X1	manual mode
	.2 34	=SH==M01/4.3	=SH==M01-H43:X1	automatic
	.3 35	=SH==M01/4.4	=SH==M01-H44:X1	cycle start
	.4 36	=SH==M01/4.5	=SH==M01-H45:X1	fault acknowledge
	.5 37	=SH==M01/4.6	=SH==M01-H46:X1	drive to home position
	.6 38	=SH==M01/4.7	=SH==M01-H47:X1	release transport
	.7 39	=SH==M01/4.8	=SH==M01-H48:X1	Acknowledge EMERGENCY STOP

32 digital outputs, 24VDC

7

9

			date	26.08.13	Titan Umreifungstechnik	TITAN	allocation	= SH==K01	+ P01
			editor	Lo Grasso	Berliner Straße 51-55		digital intput group		
			check.	26.11.13	58332 Schwelm		VS11-H	T13079	Sh. 8
change	date	name	standa	VDE 0100	origin / replace for / replace through		Möllers		12 Sh.

-A25
2.5

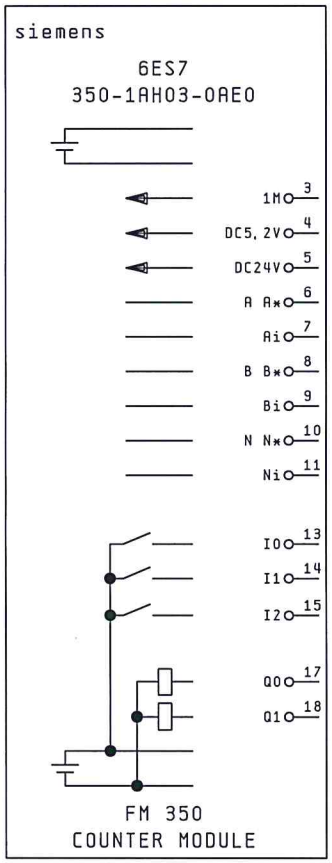

=SH==L01/11.2	=SH==L01+L19-XS1:C3	Encoder ground
=SH==L01/11.3		5,2V power supply
=SH==L01/11.4	=SH==L01+L19-XS1:C2	24V power supply
=SH==L01/11.5	-A22:E9.0	Signal A
=SH==L01/11.5		Signal Ai
=SH==L01/11.6		Signal B
=SH==L01/11.7		Signal Bi
=SH==L01/11.8		Signal N
=SH==L01/11.9		Signal Ni
=SH==L01/12.2		reserve
=SH==L01/12.3		reserve
=SH==L01/12.4		reserve
=SH==M01/7.3		reserve
=SH==M01/7.4		reserve

			date	26.08.13	Titan Umreifungstechnik	TITANO	Occupancy counter module	= SH==K01	+ P01		
			editor	Lo Grasso	Berliner Straße 51-55						
			check.	26.11.13	58332 Schwelm		VS11-H	T13079		Sh.	9
change	date	name	standa	VDE 0100	origin	replace for	replace through	Möllers			12 Sh.

-A26
2.6

siemens

6ES7 323-1BH01-0AA0

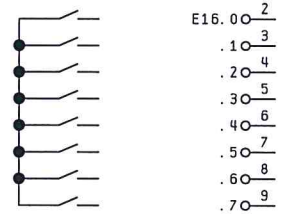

=SH==L01/13.1	:14	Signal exchange transport of boxes ready
=SH==L01/13.2	:14	Signal exchange box position 1
=SH==L01/13.3	:14	Signal exchange box position 2
=SH==L01/13.4	:14	Signal exchange start strapping machine
=SH==L01/13.5	:14	signal exchange door Is opened
=SH==L01/13.6	:14	signal exchange door Is closed
=SH==L01/13.7	:14	signal exchange reserve
=SH==L01/13.8	:14	signal exchange reserve

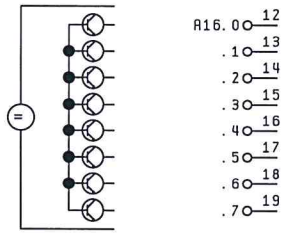

=SH==M01/8.1	=SH==M01-K81:A1	Signal exchange strapping machine Ready
=SH==M01/8.2	=SH==M01-K82:A1	Signal exchange strapping machine disorder
=SH==M01/8.3	=SH==M01-K83:A1	Signal exchange strapping machine takeover ready
=SH==M01/8.4	=SH==M01-K84:A1	Signal exchange strapping machine takeover ready
=SH==M01/8.5	=SH==M01-K85:A1	Signal exchange strapping machine empty message Magazine
=SH==M01/8.6	=SH==M01-K86:A1	signal exchange strapping machine release doors Open
=SH==M01/8.7	=SH==M01-K87:A1	signal exchange strapping machine reserve
=SH==M01/8.8	=SH==M01-K88:A1	signal exchange strapping machine reserve

8 digital inputs, 24VDC
8 digital outputs, 24VDC

9

12

| | | |

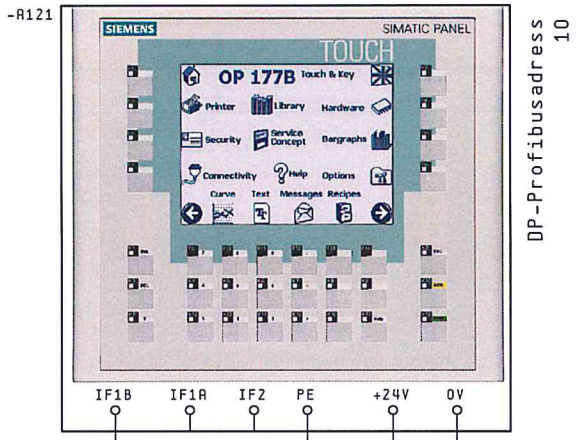

10

=SH==L01/1

			date	26.08.13	Titan Umreifungstechnik			Operator Panel 177B	= SH==K01	+ P01	
			editor	Lo Grasso	Berliner Straße 51-55		TITAN				
			check.	26.11.13	58332 Schwelm			VS11-H	T13079		Sh. 12
change	date	name	standa	VDE 0100	origin	replace for	replace through	Möllers			12 Sh.

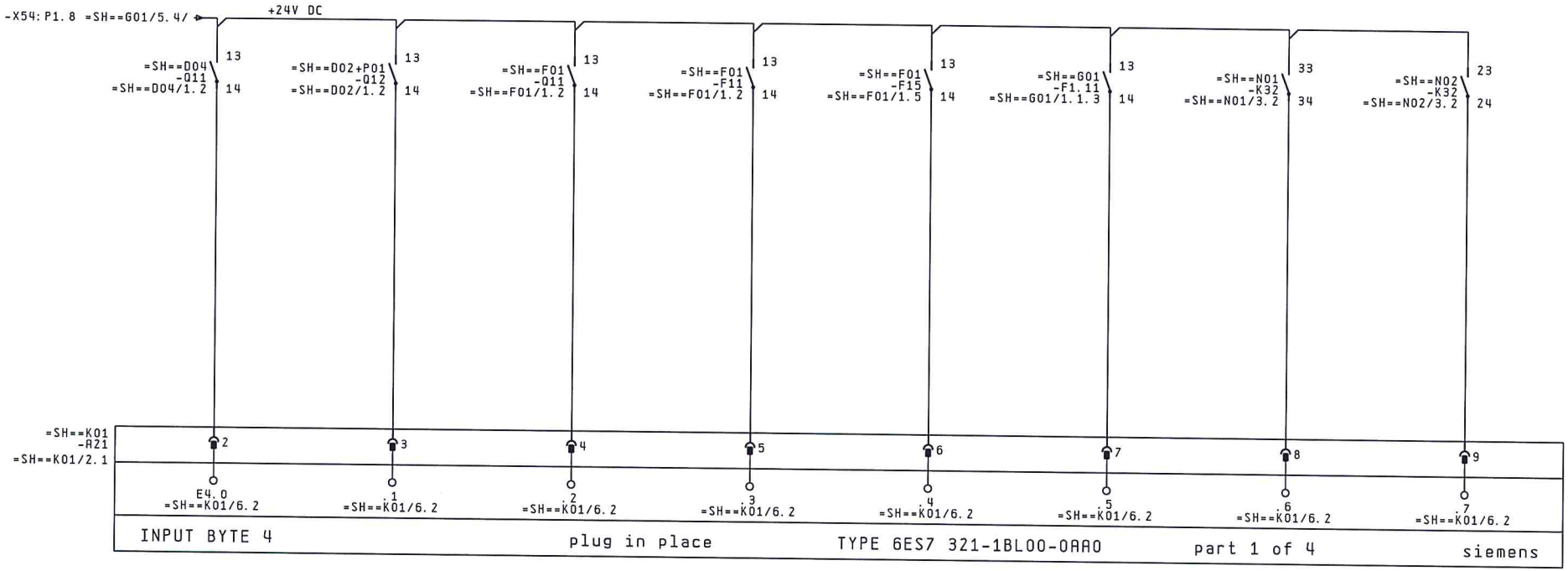

=SH==K01/12

2

			date	26.08.13	Titan Umreifungstechnik	TITAN	plc input byte 4	= SH==L01	+ P01
			editor	Lo Grasso	Berliner Straße 51-55				
			check.	26.11.13	58332 Schwelm		VS11-H	T13079	Sh. 1
change	date	name	standa	VDE 0100	origin	replace for	replace through	Möllers		13 Sh.

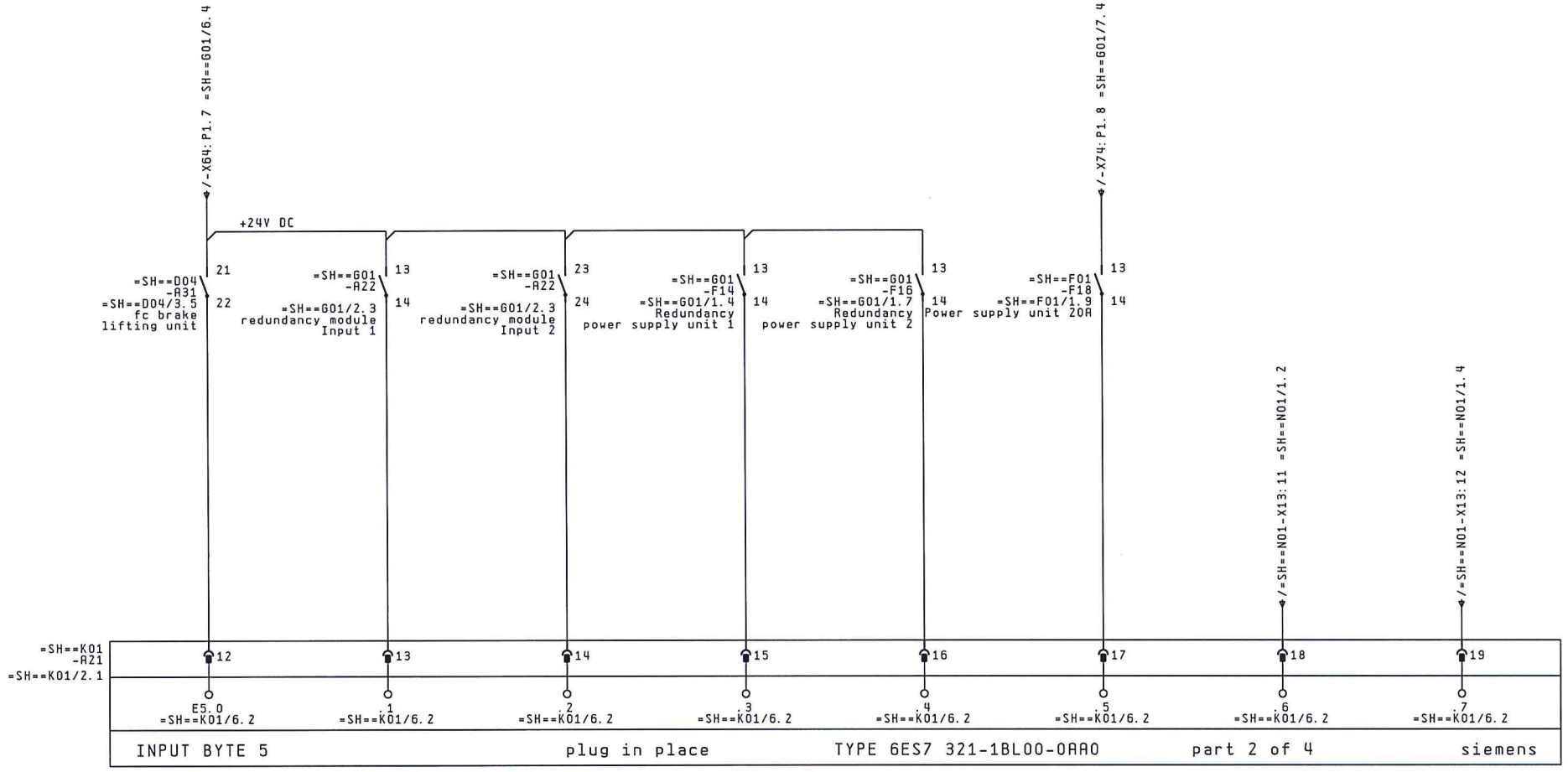

			date	26.08.13	Titan Umreifungstechnik		plc input byte 5	= SH==L01	+ P01		
			editor	Lo Grasso	Berliner Straße 51-55	TITAN					
			check.	26.11.13	58332 Schwelm		VS11-H	T13079		Sh. 2	
change	date	name	standa	VDE 0100	origin	replace for	replace through	Möllers			13 Sh.

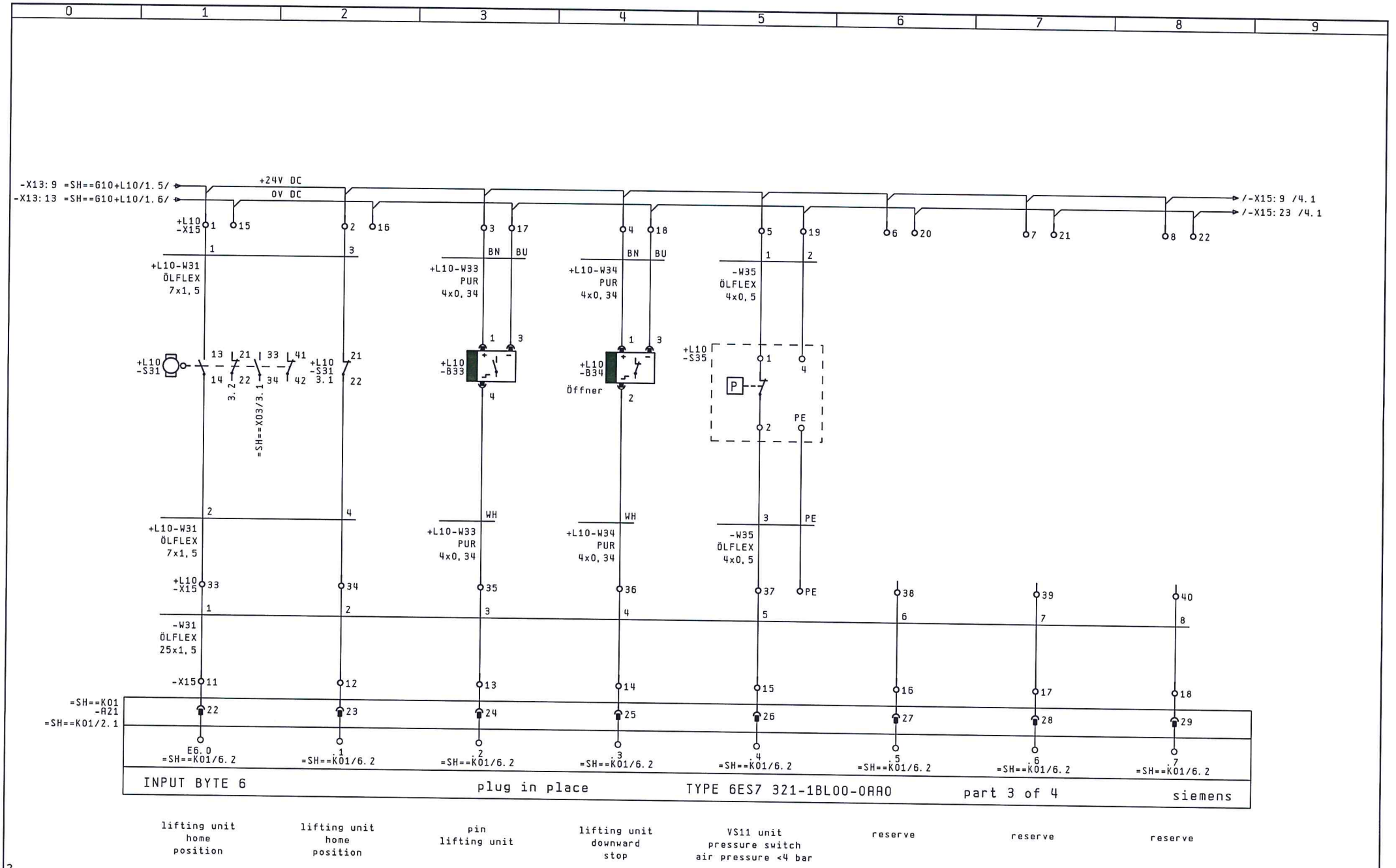
0
1
2
3
4
5
6
7
8
9
-X13: 9 =SH==G10+L10/1.5/
-X13: 13 =SH==G10+L10/1.6/
+24V DC
0V DC
/-X15: 9 /4.1
/-X15: 23 /4.1
+L10 -X15
+L10-W31 ÖLFLEX 7x1,5
+L10-W33 PUR 4x0,34
+L10-W34 PUR 4x0,34
-W35 ÖLFLEX 4x0,5
BN
BU
WH
PE
+L10 -S31
+L10 -S31 3.1
=SH==X03/3.1
+L10 -B33
+L10 -B34
Öffner
+L10 -S35
P
-W31 ÖLFLEX 25x1,5
-X15
=SH==K01 -A21
=SH==K01/2.1
E6.0
=SH==K01/6.2
INPUT BYTE 6
plug in place
TYPE 6ES7 321-1BL00-0AA0
part 3 of 4
siemens
lifting unit home position
lifting unit home position
pin lifting unit
lifting unit downward stop
VS11 unit pressure switch air pressure <4 bar
reserve
reserve
reserve

| | | |

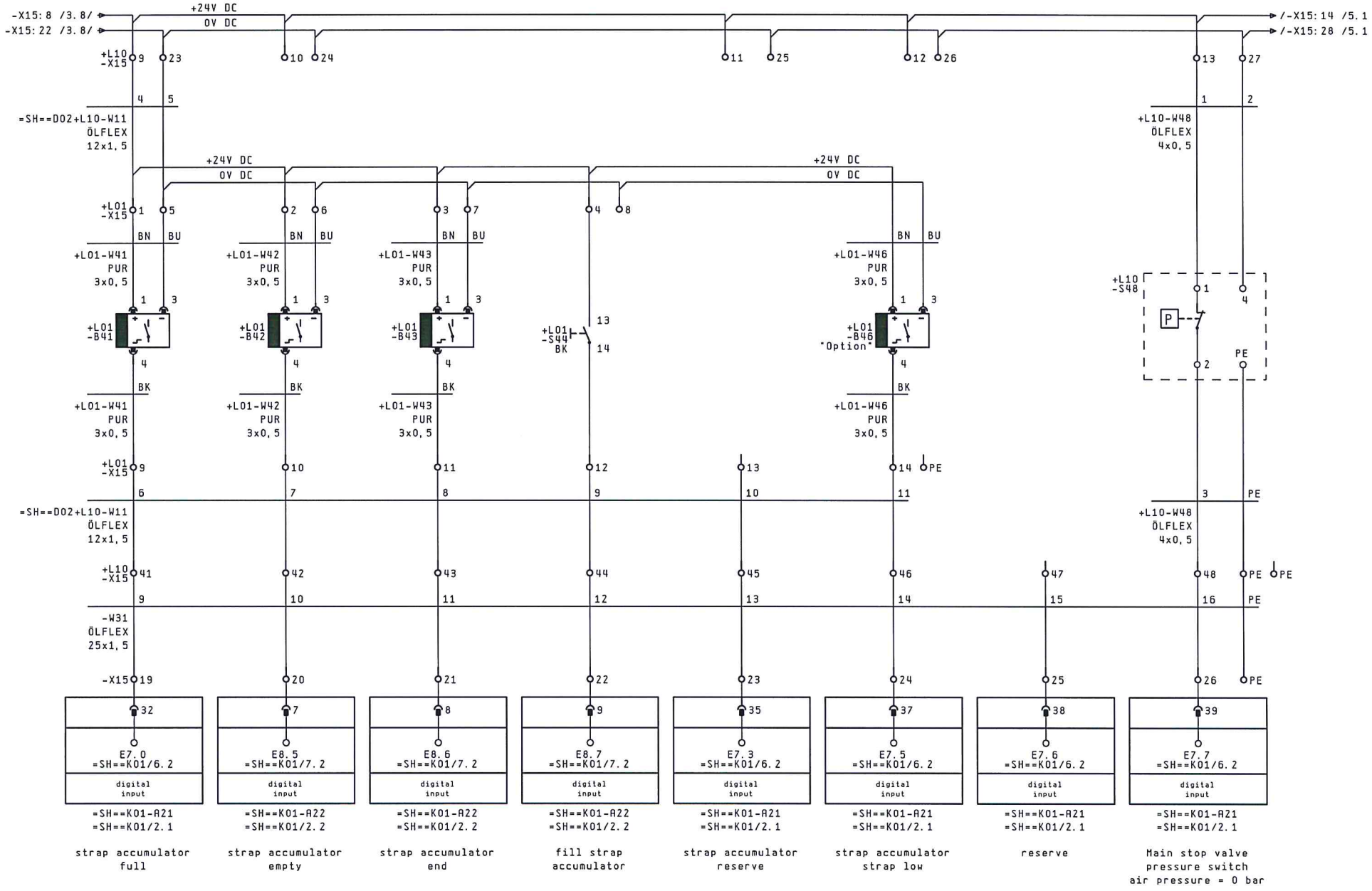
-X15: 8 /3. 8/
-X15: 22 /3. 8/
+24V DC
0V DC
/-X15: 14 /5. 1
/-X15: 28 /5. 1
+L10 -X15
=SH==D02+L10-W11 ÖLFLEX 12x1, 5
+L10-W48 ÖLFLEX 4x0, 5
+L01 -X15
+L01-W41 PUR 3x0, 5
+L01-W42 PUR 3x0, 5
+L01-W43 PUR 3x0, 5
+L01-W46 PUR 3x0, 5
+L01 -B41
+L01 -B42
+L01 -B43
+L01 -S44 BK
+L01 -B46 "Option"
+L10 -S48
P
PE
BN
BU
BK
=SH==D02+L10-W11 ÖLFLEX 12x1, 5
+L10-W48 ÖLFLEX 4x0, 5
-W31 ÖLFLEX 25x1, 5
-X15
E7.0 =SH==K01/6.2
E8.5 =SH==K01/7.2
E8.6 =SH==K01/7.2
E8.7 =SH==K01/7.2
E7.3 =SH==K01/6.2
E7.5 =SH==K01/6.2
E7.6 =SH==K01/6.2
E7.7 =SH==K01/6.2
digital input
=SH==K01-A21 =SH==K01/2.1
=SH==K01-A22 =SH==K01/2.2
strap accumulator full
strap accumulator empty
strap accumulator end
fill strap accumulator
strap accumulator reserve
strap accumulator strap low
reserve
Main stop valve pressure switch air pressure = 0 bar

| | | |

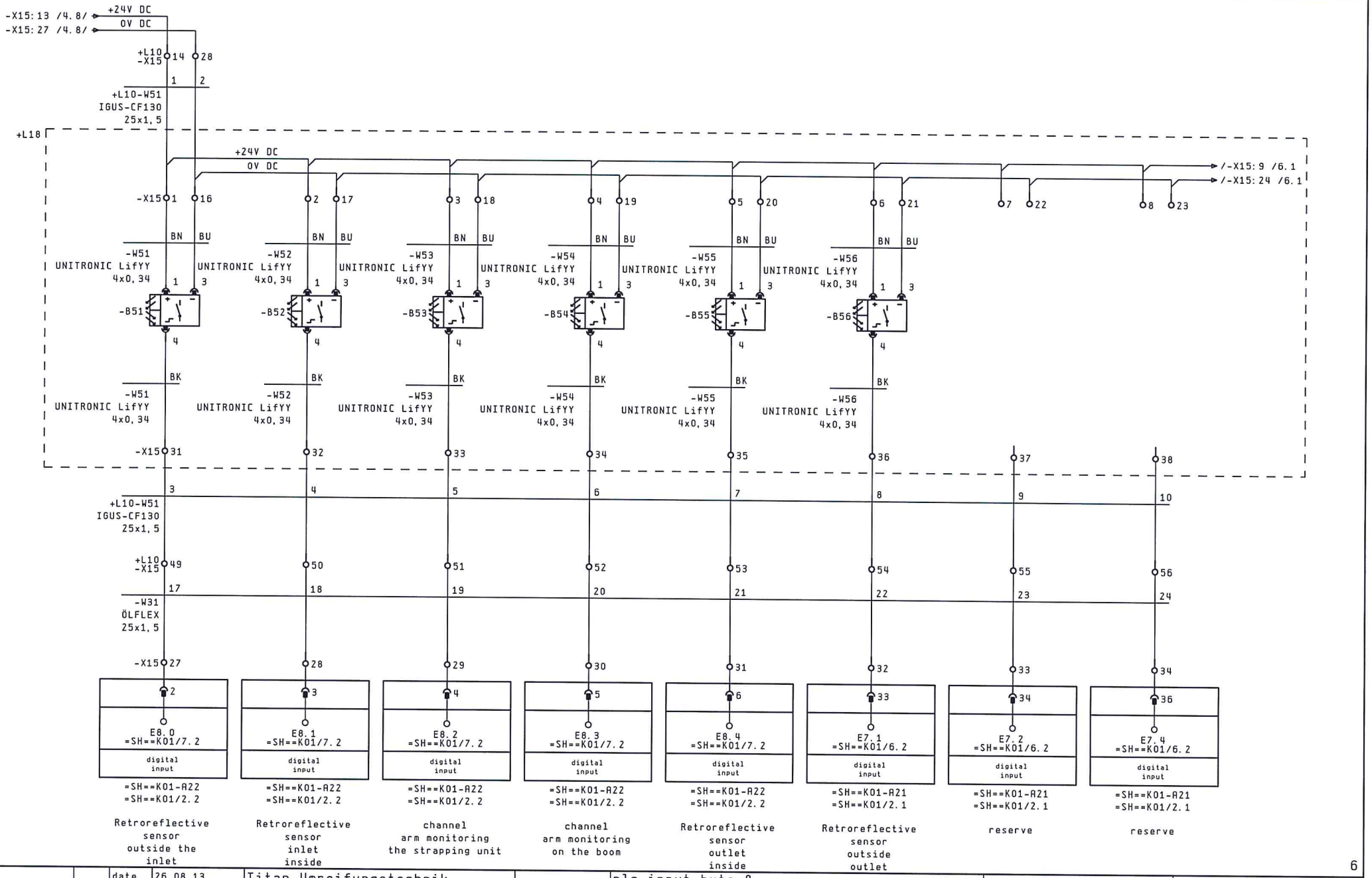
-X15:13 /4.8/
-X15:27 /4.8/
+24V DC
0V DC
+L10 -X15
+L10-W51 IGUS-CF130 25x1,5
+L18
/-X15:9 /6.1
/-X15:24 /6.1
-W51 UNITRONIC LifYY 4x0,34
-W52 UNITRONIC LifYY 4x0,34
-W53 UNITRONIC LifYY 4x0,34
-W54 UNITRONIC LifYY 4x0,34
-W55 UNITRONIC LifYY 4x0,34
-W56 UNITRONIC LifYY 4x0,34
-B51
-B52
-B53
-B54
-B55
-B56
BN
BU
BK
-W31 ÖLFLEX 25x1,5
E8.0 =SH==K01/7.2
E8.1 =SH==K01/7.2
E8.2 =SH==K01/7.2
E8.3 =SH==K01/7.2
E8.4 =SH==K01/7.2
E7.1 =SH==K01/6.2
E7.2 =SH==K01/6.2
E7.4 =SH==K01/6.2
digital input
=SH==K01-A22 =SH==K01/2.2
=SH==K01-A21 =SH==K01/2.1
Retroreflective sensor outside the inlet
Retroreflective sensor inlet inside
channel arm monitoring the strapping unit
channel arm monitoring on the boom
Retroreflective sensor outlet inside
Retroreflective sensor outside outlet
reserve
reserve

| | | |

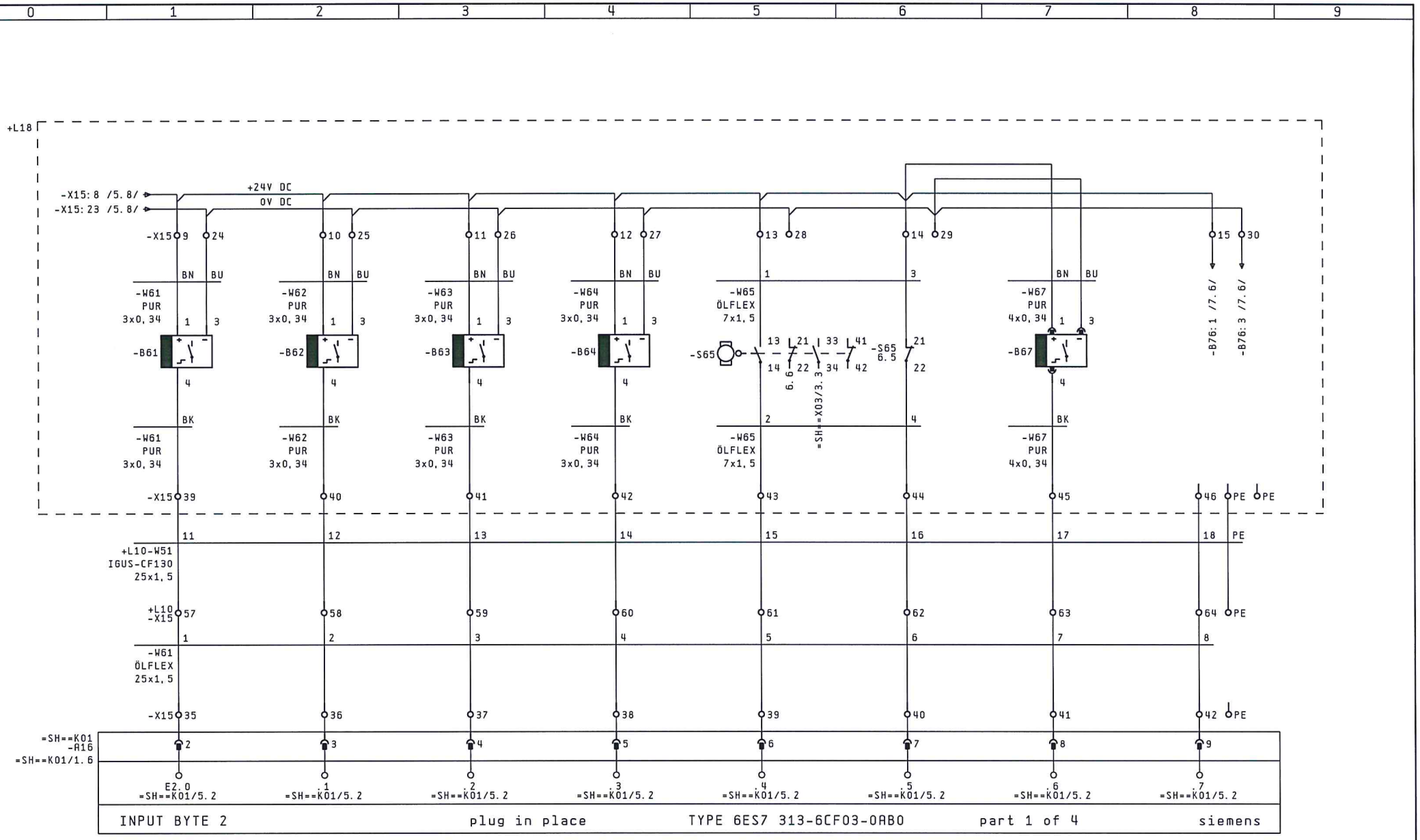
+L18
-X15: 8 /5.8/
-X15: 23 /5.8/
+24V DC
0V DC
-X15 9 24
10 25
11 26
12 27
13 28
14 29
15 30
BN BU
-W61 PUR 3x0,34
-W62 PUR 3x0,34
-W63 PUR 3x0,34
-W64 PUR 3x0,34
-W65 ÖLFLEX 7x1,5
-W67 PUR 4x0,34
1 3
-B61
-B62
-B63
-B64
-B67
4
BK
2
-S65
13 21 33 41
14 22 34 42
6.6
=SH=-X03/3.3
-S65 6.5
21 22
-B76:1 /7.6/
-B76:3 /7.6/
-X15 39 40 41 42 43 44 45 46 PE PE
11 12 13 14 15 16 17 18 PE
+L10-W51
IGUS-CF130
25x1,5
+L10 -X15 57 58 59 60 61 62 63 64 PE
1 2 3 4 5 6 7 8
-W61
ÖLFLEX
25x1,5
-X15 35 36 37 38 39 40 41 42 PE
=SH==K01 -A16
=SH==K01/1.6
2 3 4 5 6 7 8 9
E2.0 =SH==K01/5.2
1 =SH==K01/5.2
2 =SH==K01/5.2
3 =SH==K01/5.2
4 =SH==K01/5.2
5 =SH==K01/5.2
6 =SH==K01/5.2
7 =SH==K01/5.2
INPUT BYTE 2
plug in place
TYPE 6ES7 313-6CF03-0AB0
part 1 of 4
siemens
strap catch arm 1 basic position inlet left
strap catch arm 1 for coil inlet left
strap catch arm 2 basic position outlet right
strap catch arm 2 to the coil outlet right
strapping head rear home position
strapping head rear home position
strapping head in front
reserve

| | | |

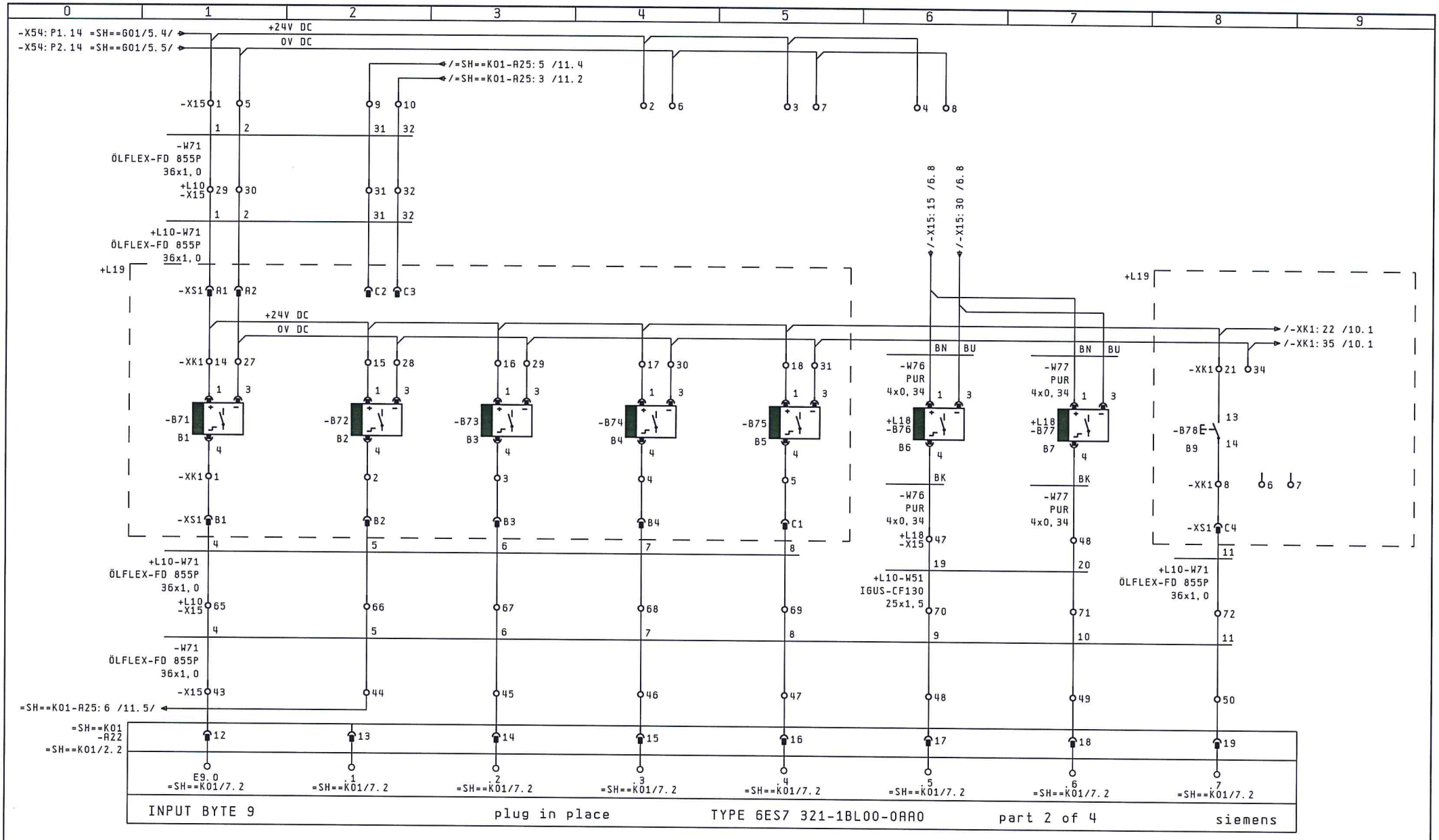

VS11L strap stop switch B1

reserve VS11L counter switch B2

VS11L O-position B3

VS11L clamp position B4

VS11L safety switch flap open B6

VS11L head before package B7

VS11L head on package B8

VS11L service - switch strap insertion B9

			date	26.08.13	Titan Umreifungstechnik	TITAN	plc input byte 9	= SH==L01	+ P01
			editor	Lo Grasso	Berliner Straße 51-55				
			check.	26.11.13	58332 Schwelm		VS11-H	T13079	Sh. 7
change	date	name	standa	VDE 0100	origin / replace for / replace through		Möllers		13 Sh.

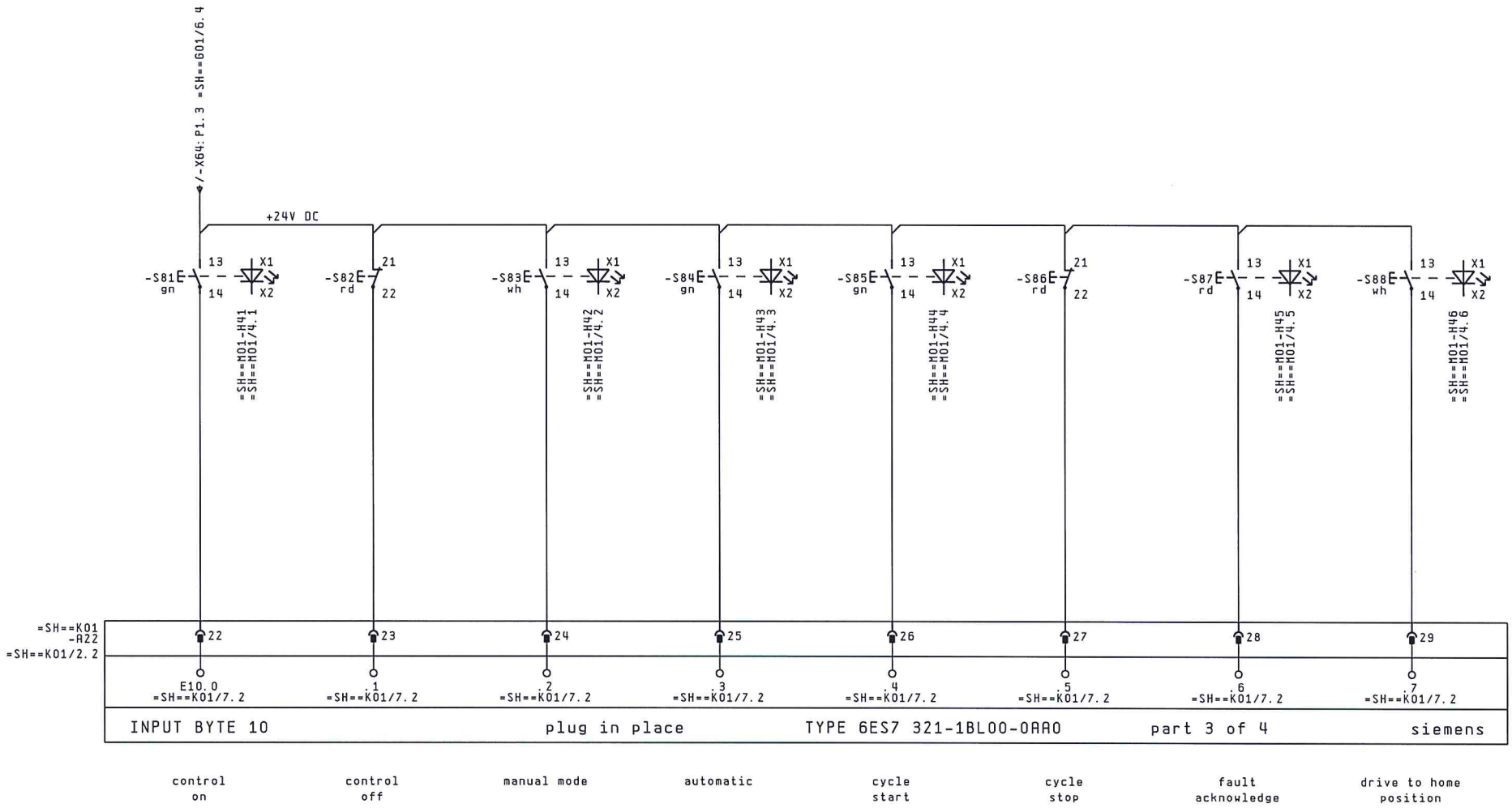

			date	26.08.13	Titan Umreifungstechnik		plc input byte 10	= SH==L01	+ P01		
			editor	Lo Grasso	Berliner Straße 51-55	TITAN					
			check.	26.11.13	58332 Schwelm		VS11-H	T13079		Sh.	8
change	date	name	standa	VDE 0100	origin	replace for	replace through	Möllers			13 Sh.

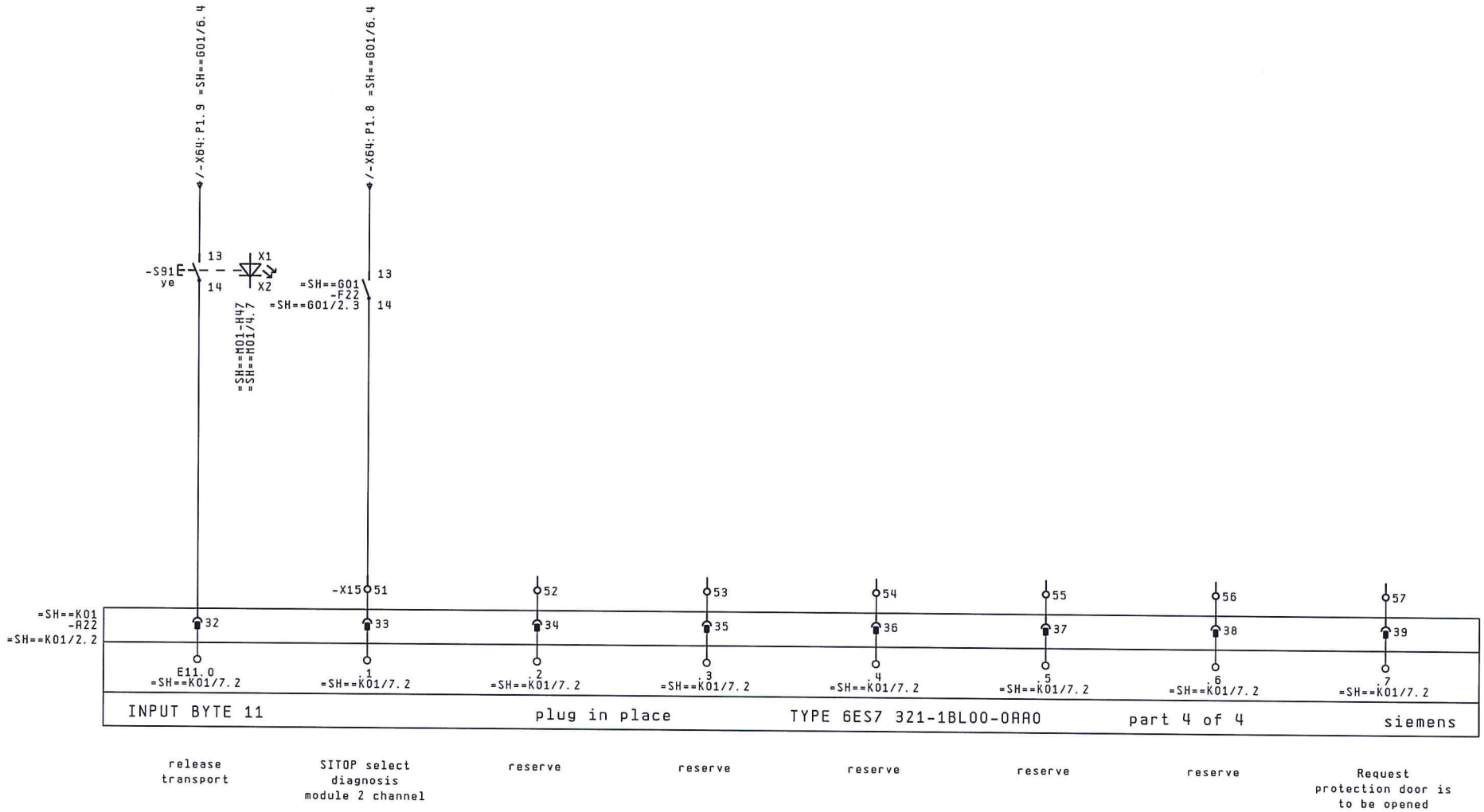

8

10

			date	26.08.13	Titan Umreifungstechnik	TITANO	plc input byte 11	= SH==L01	+ P01
			editor	Lo Grasso	Berliner Straße 51-55				
			check.	26.11.13	58332 Schwelm		VS11-H	T13079	Sh. 9
change	date	name	standa	VDE 0100	origin	replace for	replace through	Möllers		13 Sh.

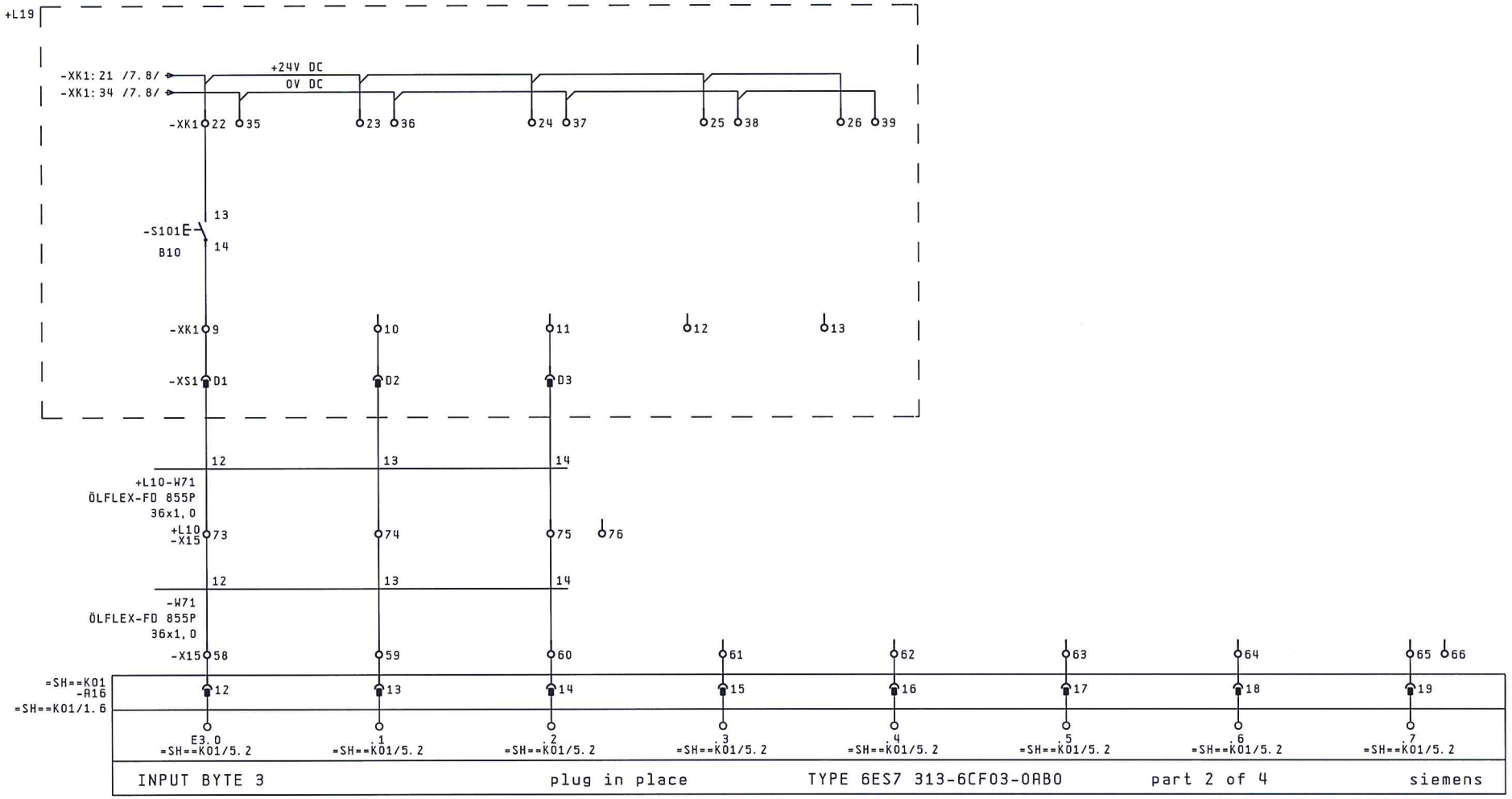

VS11L service - switch sealing B10	VS11L reserve	VS11L reserve	VS11L reserve	VS11L reserve	reserve	reserve	reserve

9 11

| | | |

VS11L
counter switch
B2

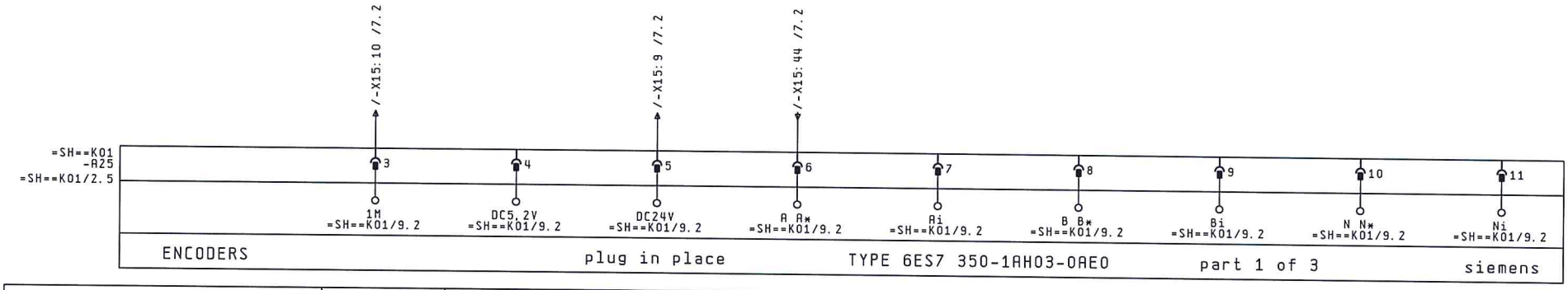

FUNCTION	1ME	DC5,2V	DC24V	aa*	A inverse	BB*	B inverse	NN*	N inverse
5V encoder RS 422 symmetric	Encoder ground	5,2V power supply	24V power supply	Signal A	Signal Ai	Signal B	Signal Bi	Signal N	Signal Ni
24V encoder asymmetric				Encoder Signal A*	---	Encoder Signal B*	---	Encoder Signal N*	---
24V pulse generator						direction signal		---	
24V initiator						---			

10

12

			date	26.08.13	Titan Umreifungstechnik	TITAN	plc counter module	= SH==L01	+ P01
			editor	Lo Grasso	Berliner Straße 51-55				
			check.	26.11.13	58332 Schwelm		VS11-H	T13079	Sh. 11
change	date	name	standa	VDE 0100	origin / replace for / replace through		Möllers		13 Sh.

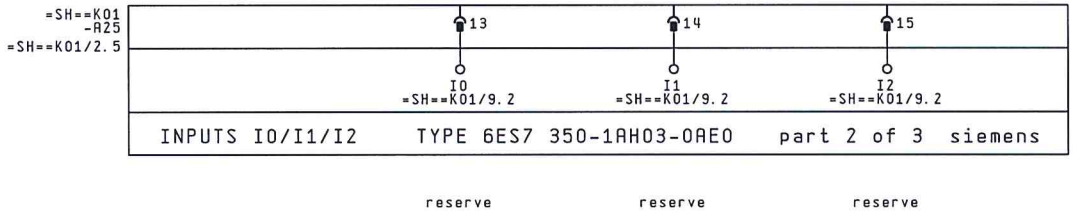

			date	26.08.13	Titan Umreifungstechnik		plc counter module	= SH==L01	+ P01		
			editor	Lo Grasso	Berliner Straße 51-55	TITAN					
			check.	26.11.13	58332 Schwelm		VS11-H	T13079		Sh.	12
change	date	name	standa	VDE 0100	origin	replace for / replace through	Möllers			13	Sh.

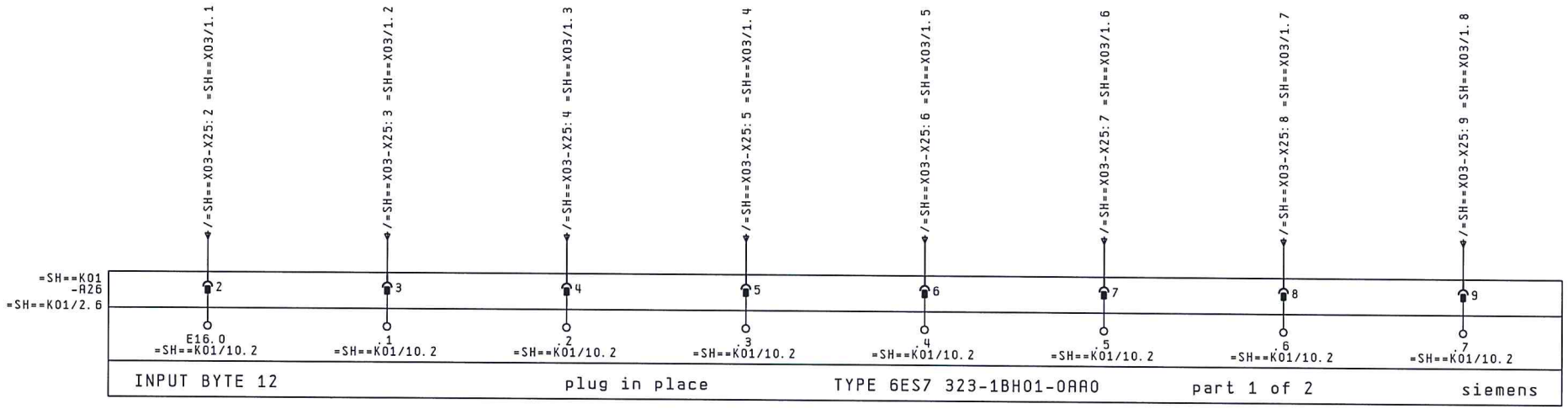

Signal exchange transport of boxes ready	Signal exchange box position 1	Signal exchange box position 2	Signal exchange start strapping machine	signal exchange door Is opened	signal exchange door Is closed	signal exchange reserve	signal exchange reserve

12

=SH==M01/1

			date	26.08.13	Titan Umreifungstechnik	TITAN	plc input byte 16	= SH==L01	+ P01
			editor	Lo Grasso	Berliner Straße 51-55				
			check.	26.11.13	58332 Schwelm		VS11-H	T13079	Sh. 13
change	date	name	standa	VDE 0100	origin / replace for / replace through		Möllers		13 Sh.

permanent voltage

=SH==K01
-A23
=SH==K01/2.3

OUTPUT BYTE 12 | plug in place | TYPE 6ES7 322-1BL00-0AA0 | part 1 of 4 | siemens

=SH==K01/8.2 A12.0	=SH==K01/8.2 .1	=SH==K01/8.2 .2	=SH==K01/8.2 .3	=SH==K01/8.2 .4	=SH==K01/8.2 .5	=SH==K01/8.2 .6	=SH==K01/8.2 .7
2	3	4	5	6	7	8	9

-X16 1 2 3 4 5 6

-A18 A1 A2

-K11 A1 A2

-X44: P2.4 =SH==G01/4.5/

0V DC

-K16 24V A1 A2

-X54: P2.6 =SH==G01/5.5/

-X54: P2.15 =SH==G01/5.5/

0V DC

1 2 =SH==D04/1.1
3 4 =SH==D04/1.1
5 6 =SH==D04/1.1
21 22 =SH==N01/3.4

14
12 11 =SH==X02/1.5

lift motor fc contactor	reserve	reserve	reserve	reserve	safety door open	reserve	strapping counter

=SH==L01/13 2

			date	26.08.13	Titan Umreifungstechnik	TITAN	plc output byte 12	= SH==M01	+ P01
			editor	Lo Grasso	Berliner Straße 51-55				
			check.	26.11.13	58332 Schwelm		VS11-H	T13079	Sh. 1
change	date	name	standa	VDE 0100	origin	replace for	replace through	Möllers		8 Sh.

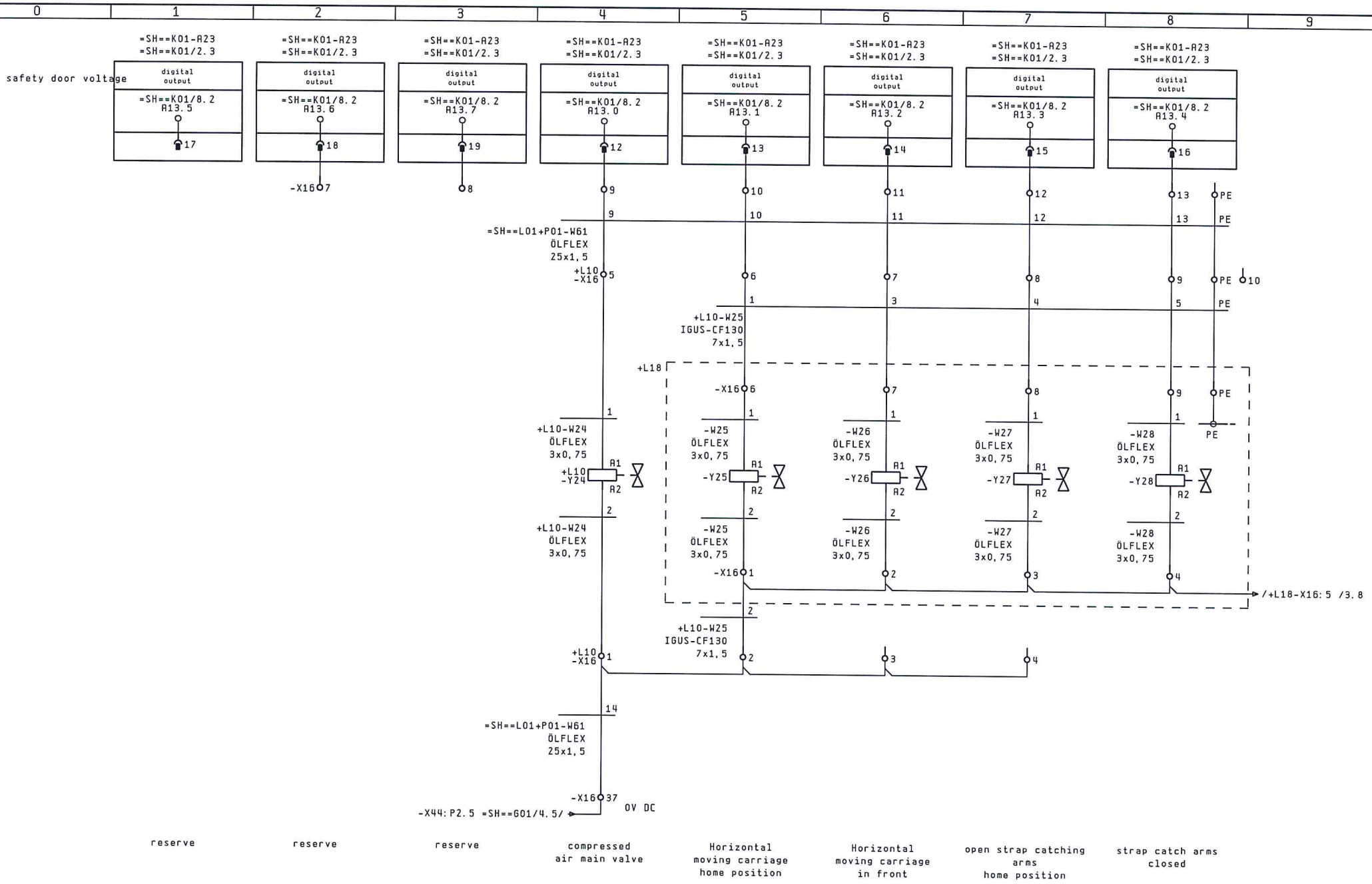

			date	26.08.13	Titan Umreifungstechnik		plc output byte 13	= SH==M01	+ P01		
			editor	Lo Grasso	Berliner Straße 51-55	TITAN					
			check.	26.11.13	58332 Schwelm		VS11-H	T13079		Sh. 2	
change	date	name	standa	VDE 0100	origin	replace for	replace through	Möllers			8 Sh.

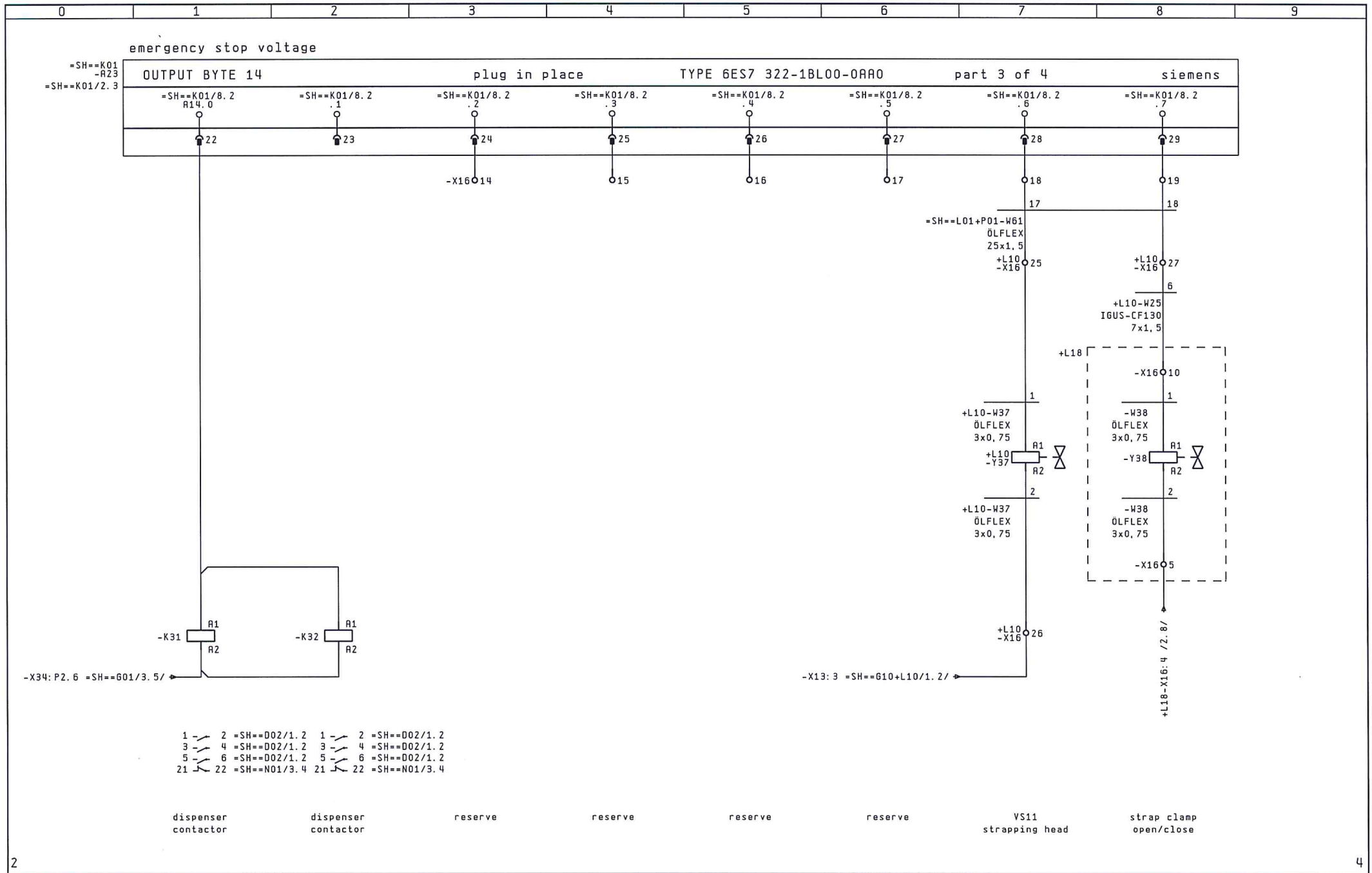

			date	26.08.13	Titan Umreifungstechnik		plc output byte 14	= SH==M01	+ P01		
			editor	Lo Grasso	Berliner Straße 51-55	TITAN					
			check.	26.11.13	58332 Schwelm		VS11-H	T13079		Sh.	3
change	date	name	standa	VDE 0100	origin	replace for	replace through	Möllers			8 Sh.

permanent voltage

=SH==K01
-A23
=SH==K01/2.3

OUTPUT BYTE 15 — plug in place — TYPE 6ES7 322-1BL00-0AA0 — part 4 of 4 — siemens

=SH==K01/8.2 A15.0	=SH==K01/8.2 .1	=SH==K01/8.2 .2	=SH==K01/8.2 .3	=SH==K01/8.2 .4	=SH==K01/8.2 .5	=SH==K01/8.2 .6	=SH==K01/8.2 .7
32	33	34	35	36	37	38	39
-H41 =SH==L01/8.1 gn	-H42 =SH==L01/8.3 wh	-H43 =SH==L01/8.4 gn	-H44 =SH==L01/8.5 gn	-H45 =SH==L01/8.7 rd	-H46 =SH==L01/8.8 wh	-H47 =SH==L01/9.1 ye	-H48 =SH==N01/3.3 rd
X1 X2	X1 X2	X1 X2	X1 X2	X1 X2	X1 X2	X1 X2	X1 X2

-X54:P2.13 =SH==G01/5.5/ — 0V DC

control on	manual mode	automatic	cycle start	fault acknowledge	drive to home position	release transport	Acknowledge EMERGENCY STOP

3 5

			date	26.08.13	Titan Umreifungstechnik	TITAN	plc output byte 15	= SH==M01	+ P01
			editor	Lo Grasso	Berliner Straße 51-55				
			check.	26.11.13	58332 Schwelm		VS11-H	T13079	Sh. 4
change	date	name	standa	VDE 0100	origin	replace for / replace through	Möllers		8 Sh.

emergency stop voltage

=SH==K01
-A16
=SH==K01/1.6

OUTPUT BYTE 10 | plug in place | TYPE 6ES7 313-6CF03-0AB0 | part 3 of 4 | siemens

=SH==K01/5.2 A2.0 | =SH==K01/5.2 .1 | =SH==K01/5.2 .2 | =SH==K01/5.2 .3 | =SH==K01/5.2 .4 | =SH==K01/5.2 .5 | =SH==K01/5.2 .6 | =SH==K01/5.2 .7

22 | 23 | 24 | 25 | 26 | 27 | 28 | 29

-X16 20 | 21 | 22 | 23 | 24 | 25 | 26 | 27

17 | 18 | 19 | 20 | 21 | 22 | 23 | 24

=SH==L01-W71
ÖLFLEX-FD 855P
36x1,0

+L10
-X16 12 | 13 | 14 | 15 | 16 | 17 | 18 | 19

17 | 18 | 19 | 20 | 21 | 22 | 23 | 24

=SH==L01+L10-W71
ÖLFLEX-FD 855P
36x1,0

+L19

-XS1 E1 | E2 | E3 | E4 | F1 | F2 | F3 | F4

-XK1 51 | 52 | 53 | 54 | 55 | 56 | 57 | 58

-Y51 | -Y52 | -Y53 | -Y54 | -Y55 | -Y56 | -Y57 | -Y58 (A1 / A2)

-XK1 63 | 64 | 65 | 66 | 67 | 68 | 69 | 70

0V DC

/-XK1:71 /6.1

-XS1 A3

3

=SH==L01+L10-W71
ÖLFLEX-FD 855P
36x1,0

+L10
-X16 11

3

=SH==L01-W71
ÖLFLEX-FD 855P
36x1,0

-X16 38

-X34:P2.7 =SH==G01/3.5/

VS11L air valve middle Y1	VS11L air valve quick Y2	VS11L transport motor forward Y3	VS11L transport motor backward Y4	VS11L sealing motor Y5	VS11L tensioning motor Y6	VS11L transport slide Y7	VS11L straightening device Y8

4 6

			date	26.08.13	Titan Umreifungstechnik	TITAN	plc output byte 2	= SH==M01	+ P01
			editor	Lo Grasso	Berliner Straße 51-55				
			check.	26.11.13	58332 Schwelm		VS11-H	T13079	Sh. 5
change	date	name	standa	VDE 0100	origin	replace for / replace through	Möllers		8 Sh.

emergency stop voltage

=SH==K01
-A16
=SH==K01/1.6

OUTPUT BYTE 11 — plug in place — TYPE 6ES7 313-6CF03-0AB0 — part 4 of 4 — siemens

=SH==K01/5.2 A3.0 (32) | =SH==K01/5.2 .1 (33) | =SH==K01/5.2 .2 (34) | =SH==K01/5.2 .3 (35) | =SH==K01/5.2 .4 (36) | =SH==K01/5.2 .5 (37) | =SH==K01/5.2 .6 (38) | =SH==K01/5.2 .7 (39)

-X16: 28 | 29 | 30 | 31 | 32 | 33 | 34 | 35 | PE

/-X34: P1.1 =SH==G01/3.4

-X16: 36 | 30 | PE

25 | 26 | 27 | 28

=SH==L01-W71
ÖLFLEX-FD 855P
36x1,0

+L10
-X16: 20 | 21 | 22 | 23 | 24 | PE

25 | 26 | 27 | 28 | 30 | PE

=SH==L01+L10-W71
ÖLFLEX-FD 855P
36x1,0

+L19

-XS1: G1 | G2 | G3 | G4 | A4 | D4

-XK1: 59 | 60 | 61 | 62 | 77 | 78 | 79 | 80 | 81 | 82 | 83

-Y61 | -Y62 | -Y63 | -Y64 (A1 / A2)

-XK1: 71 | 72 | 73 | 74 | 75 | 76

-XK1:70 /5.8/ — 0V DC

VS11L strap stop cylinder Y9	VS11L tensioning slide pressed Y16	VS11L open flap Y17	VS11L close flap Y18	VS11L reserve	VS11L reserve	VS11L reserve	VS11L reserve

5 7

			date	26.08.13	Titan Umreifungstechnik	TITAN	plc output byte 3	= SH==M01	+ P01
			editor	Lo Grasso	Berliner Straße 51-55				
			check.	26.11.13	58332 Schwelm		VS11-H	T13079	Sh. 6
change	date	name	standa	VDE 0100	origin	replace for	replace through	Möllers		8 Sh.

permanent voltage

=SH==K01
-A25
=SH==K01/2.5

OUTPUTS Q0/Q1	TYPE 6ES7 350-1AH03-0AE0	part 3 of 3	siemens

reserve reserve

6 8

			date	26.08.13	Titan Umreifungstechnik		plc counter module	= SH==M01	+ P01		
			editor	Lo Grasso	Berliner Straße 51-55						
			check.	26.11.13	58332 Schwelm		VS11-H	T13079		Sh.	7
change	date	name	standa	VDE 0100	origin	replace for	replace through	Möllers			8 Sh.

permanent voltage

=SH==K01
-A26
=SH==K01/2.6

OUTPUT BYTE 16 | plug in place | TYPE 6ES7 323-1BH01-0AA0 | part 2 of 2 | siemens

=SH==K01/10.2 A16.0	=SH==K01/10.2 .1	=SH==K01/10.2 .2	=SH==K01/10.2 .3	=SH==K01/10.2 .4	=SH==K01/10.2 .5	=SH==K01/10.2 .6	=SH==K01/10.2 .7
22	23	24	25	26	27	28	29
-K81 24V	-K82 24V	-K83 24V	-K84 24V	-K85 24V	-K86 24V	-K87 24V	-K88 24V
A1 / A2	A1 / A2	A1 / A2	A1 / A2	A1 / A2	A1 / A2	A1 / A2	A1 / A2

-X54:P2.11 =SH==G01/5.5/ — 0V DC

14 / 12 / 11	14 / 12 / 11	14 / 12 / 11	14 / 12 / 11	14 / 12 / 11	14 / 12 / 11	14 / 12 / 11	14 / 12 / 11
=SH==X03/2.1	=SH==X03/2.2	=SH==X03/2.3	=SH==X03/2.4	=SH==X03/2.5	=SH==X03/2.6	=SH==X03/2.7	=SH==X03/2.8
Signal exchange strapping machine Ready	Signal exchange strapping machine disorder	Signal exchange strapping machine takeover ready	Signal exchange strapping machine takeover ready	Signal exchange strapping machine empty message Magazine	signal exchange strapping machine release doors Open	signal exchange strapping machine reserve	signal exchange strapping machine reserve

7

=SH==G10+L10/1

			date	26.08.13	Titan Umreifungstechnik	TITAN	plc output byte 16	= SH==M01	+ P01
			editor	Lo Grasso	Berliner Straße 51-55				
			check.	26.11.13	58332 Schwelm		VS11-H	T13079	Sh. 8
change	date	name	standa	VDE 0100	origin	replace for	replace through	Möllers		8 Sh.

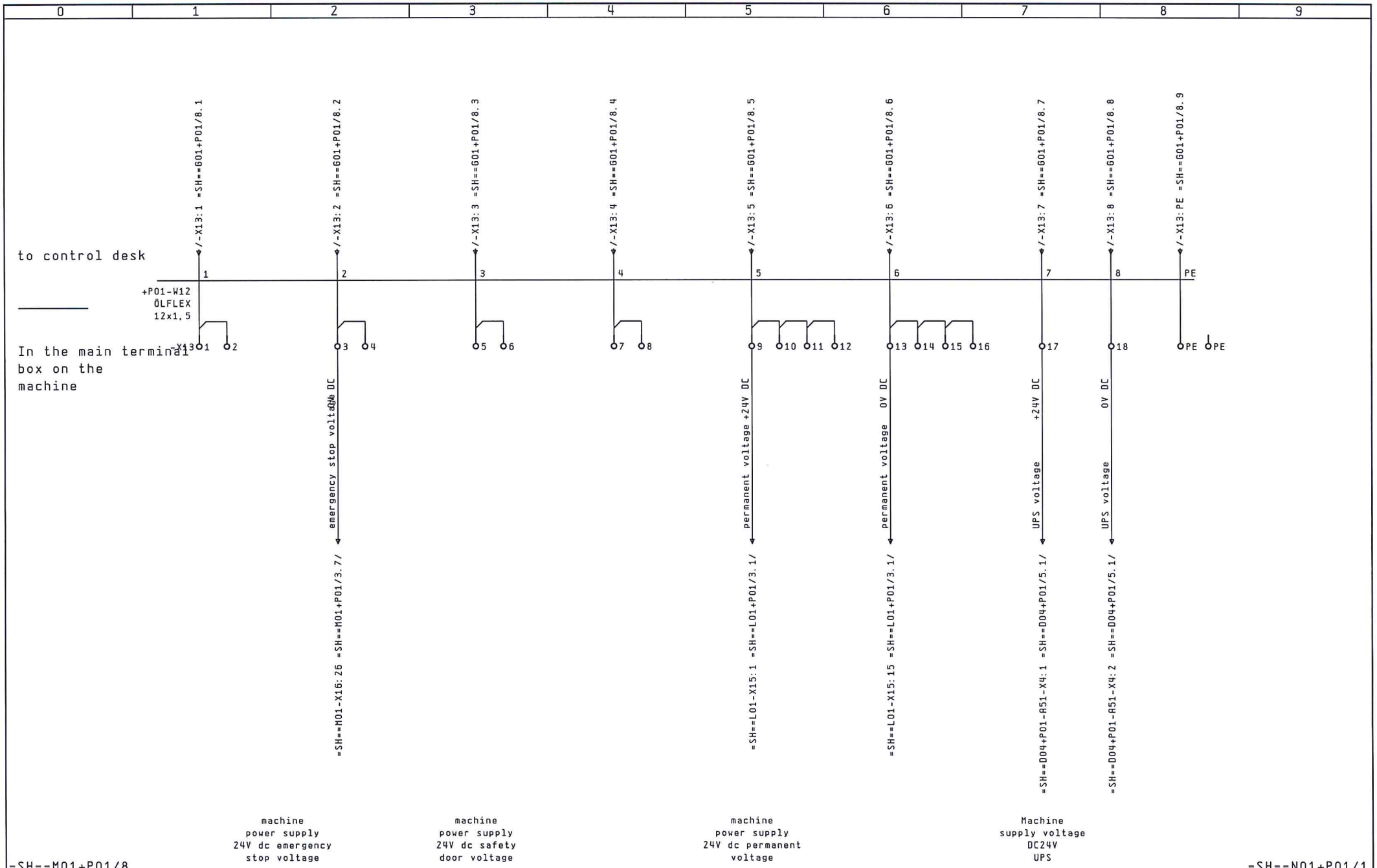

			date	26.08.13	Titan Umreifungstechnik		24V power supply in the main terminal box	= SH==G10	+L10		
			editor	Lo Grasso	Berliner Straße 51-55	TITAN	VS11-H	T13079		Sh.	1
			check.	26.11.13	58332 Schwelm						1 Sh.
change	date	name	standa	VDE 0100	origin	replace for	replace through	Möllers			

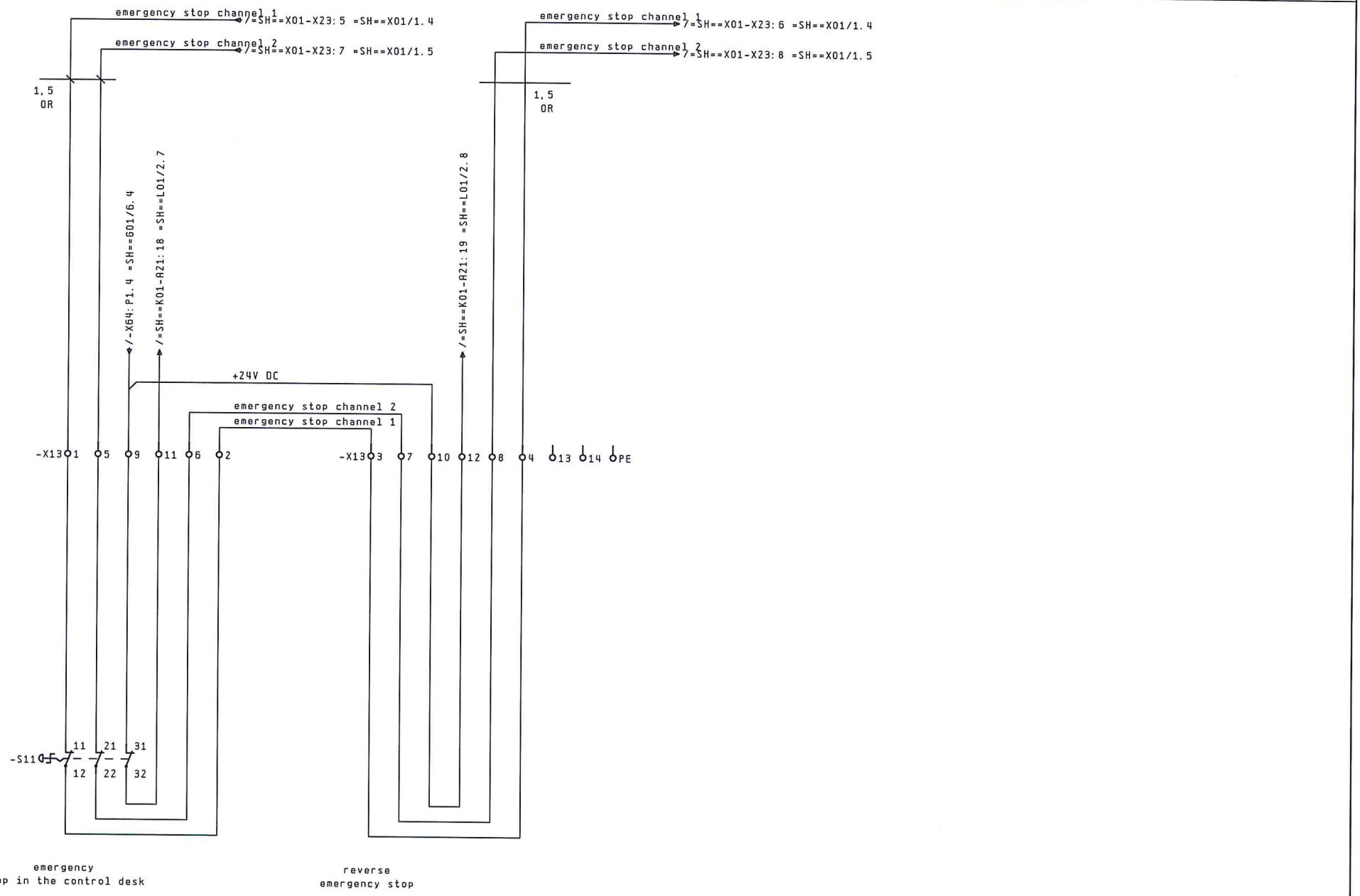

=SH==G10+L10/1

2

			date	26.08.13	Titan Umreifungstechnik	TITAN	emergency stop loop	= SH==N01	+ P01	
			editor	Lo Grasso	Berliner Straße 51-55					
			check.	26.11.13	58332 Schwelm		VS11-H	T13079		Sh. 1
change	date	name	standa	VDE 0100	origin	replace for	replace through	Möllers		4 Sh.

0	1	2	3	4	5	6	7	8	9

1 3

			date	26.08.13	Titan Umreifungstechnik		TITAN	empty sheet	= SH==N01	+ P01	
			editor	Lo Grasso	Berliner Straße 51-55				T13079		Sh. 2
			check.	26.11.13	58332 Schwelm			VS11-H			4 Sh.
change	date	name	standa	VDE 0100	origin	replace for	replace through	Möllers			

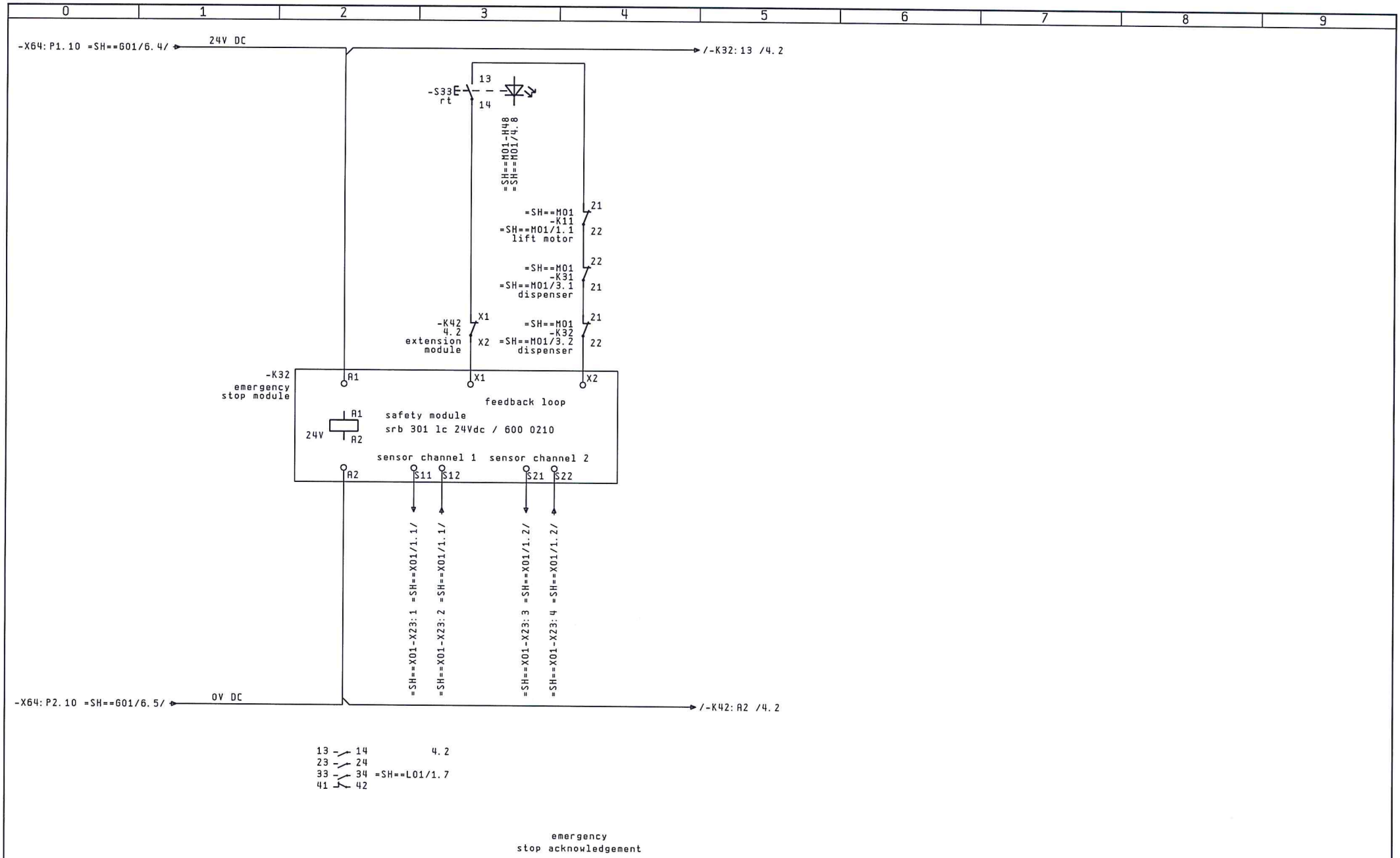

2

4

			date	26.08.13	Titan Umreifungstechnik		emergency stop module	= SH==N01	+ P01		
			editor	Lo Grasso	Berliner Straße 51-55	TITAN					
			check.	26.11.13	58332 Schwelm		VS11-H	T13079		Sh. 3	
change	date	name	standa	VDE 0100	origin	replace for	replace through	Möllers			4 Sh.

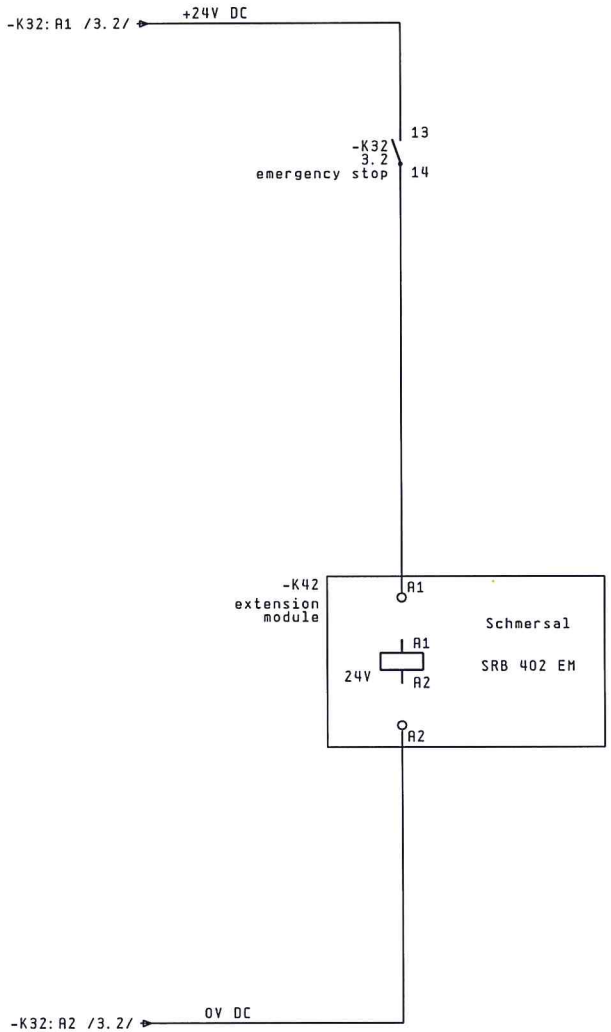

13 — 14 =SH==D04/3.2
23 — 24 =SH==D04/3.2
33 — 34 =SH==G01/3.4
43 — 44 =SH==G01/4.4
51 — 52
61 — 62
X1 — X2 3.3

emergency
stop extension module

3

=SH==N02/1

			date	26.08.13	Titan Umreifungstechnik		emergency stop extension module	= SH==N01	+ P01		
			editor	Lo Grasso	Berliner Straße 51-55	TITAN					
			check.	26.11.13	58332 Schwelm		VS11-H	T13079		Sh. 4	
change	date	name	standa	VDE 0100	origin	replace for	replace through	Möllers		4 Sh.	

0	1	2	3	4	5	6	7	8	9

=SH==N01/4

2

			date	26.08.13	Titan Umreifungstechnik	TITAN	empty sheet	= SH==N02	+ P01
			editor	Lo Grasso	Berliner Straße 51-55				
			check.	26.11.13	58332 Schwelm		VS11-H	T13079	Sh. 1
change	date	name	standa	VDE 0100	origin	replace for / replace through	Möllers		4 Sh.

0	1	2	3	4	5	6	7	8	9

1 3

			date	26.08.13	Titan Umreifungstechnik		empty sheet	= SH==NO2	+ P01		
			editor	Lo Grasso	Berliner Straße 51-55						
			check.	26.11.13	58332 Schwelm		VS11-H	T13079		Sh. 2	
change	date	name	standa	VDE 0100	origin	replace for	replace through	Möllers			4 Sh.

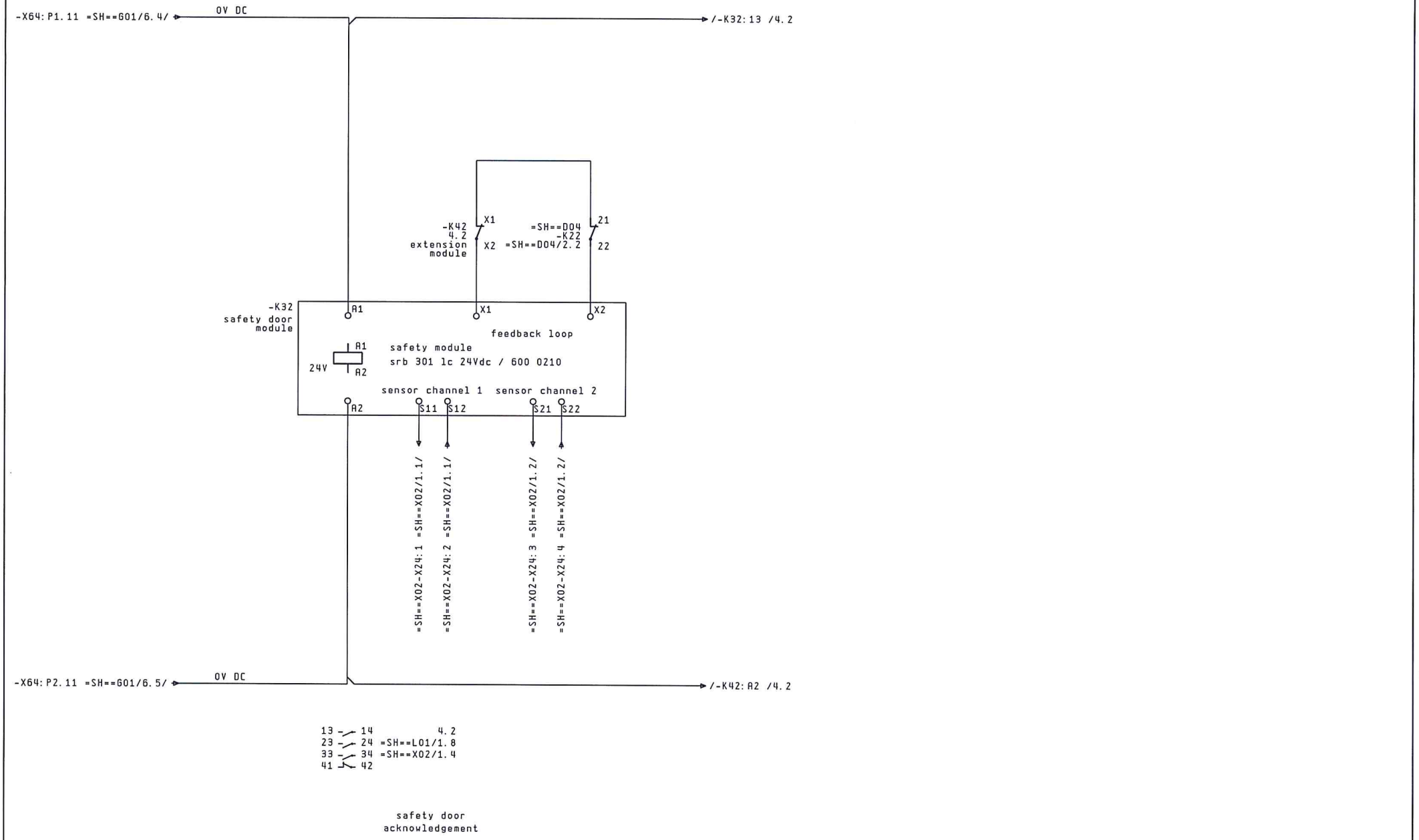

			date	26. 08. 13	Titan Umreifungstechnik	TITANO	safety door module	= SH==N02	+ P01		
			editor	Lo Grasso	Berliner Straße 51-55			T13079		Sh. 3	
			check.	26. 11. 13	58332 Schwelm		VS11-H			4 Sh.	
change	date	name	standa	VDE 0100	origin	replace for	replace through	Möllers			

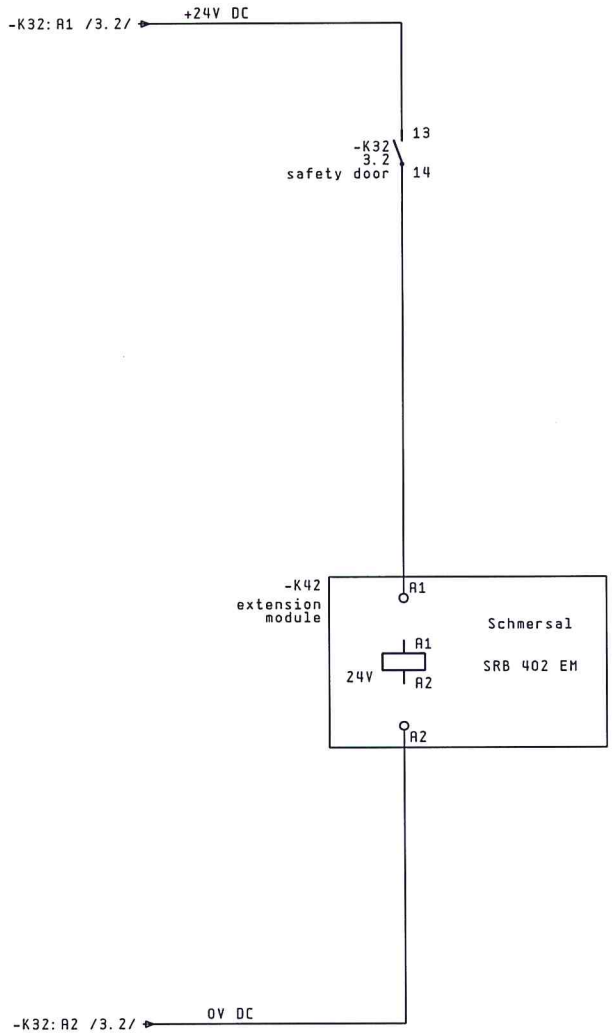

13 — 14 =SH==D04/3.2
23 — 24 =SH==D04/3.2
33 — 34
43 — 44 =SH==G01/4.4
51 — 52
61 — 62
X1 — X2 3.3

safety door
extension module

3

=SH==X01/1

			date	26.08.13	Titan Umreifungstechnik		safety door extension module	= SH==N02	+ P01		
			editor	Lo Grasso	Berliner Straße 51-55	TITAN					
			check.	26.11.13	58332 Schwelm		VS11-H	T13079		Sh.	4
change	date	name	standa	VDE 0100	origin	replace for	replace through	Möllers			4 Sh.

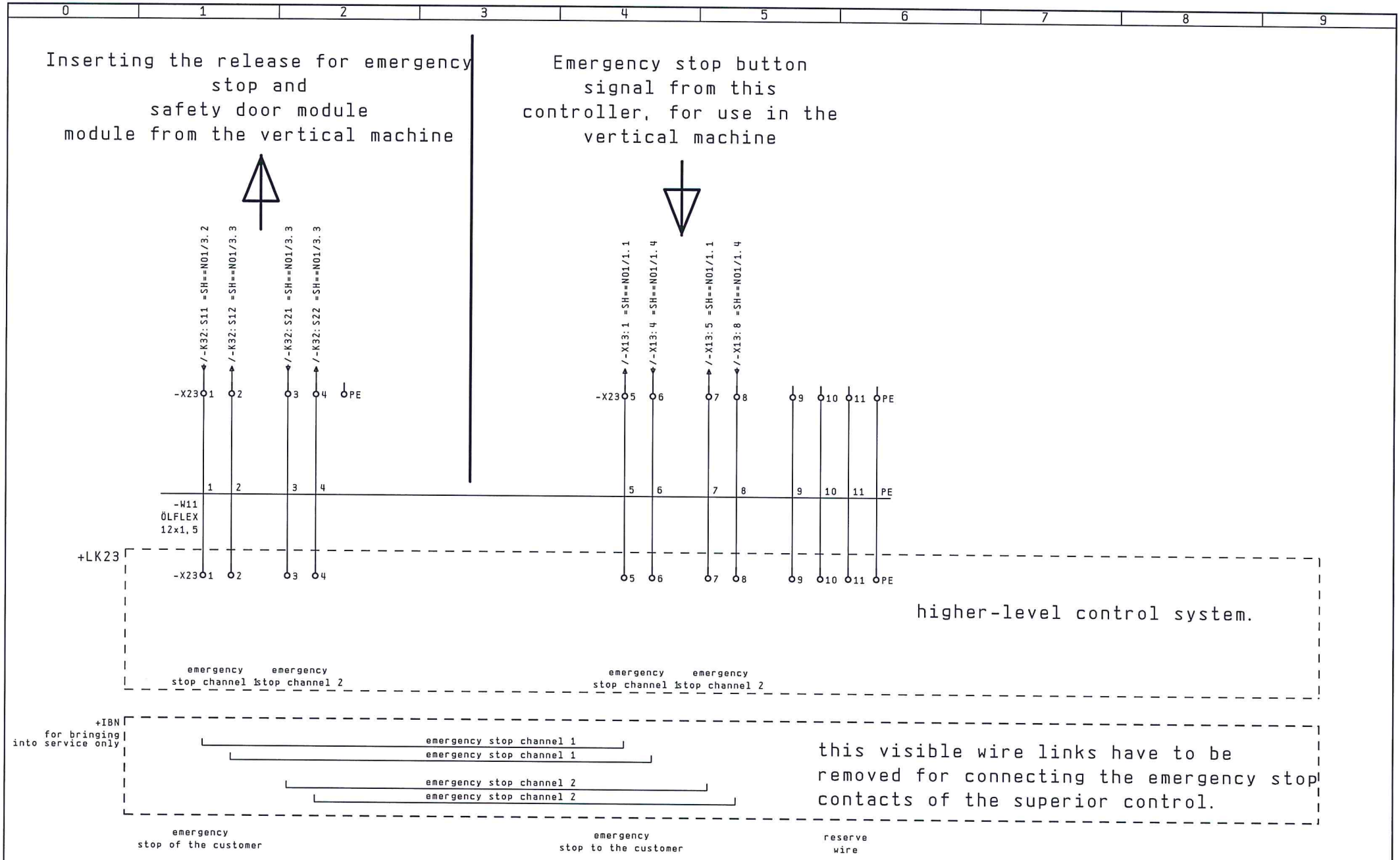

			date	26.08.13	Titan Umreifungstechnik		signal exchange emergency stop	= SH==XO1	+ PO1		
			editor	Lo Grasso	Berliner Straße 51-55						
			check.	26.11.13	58332 Schwelm		VS11-H	T13079		Sh. 1	
change	date	name	standa	VDE 0100	origin	replace for	replace through	Möllers			1 Sh.

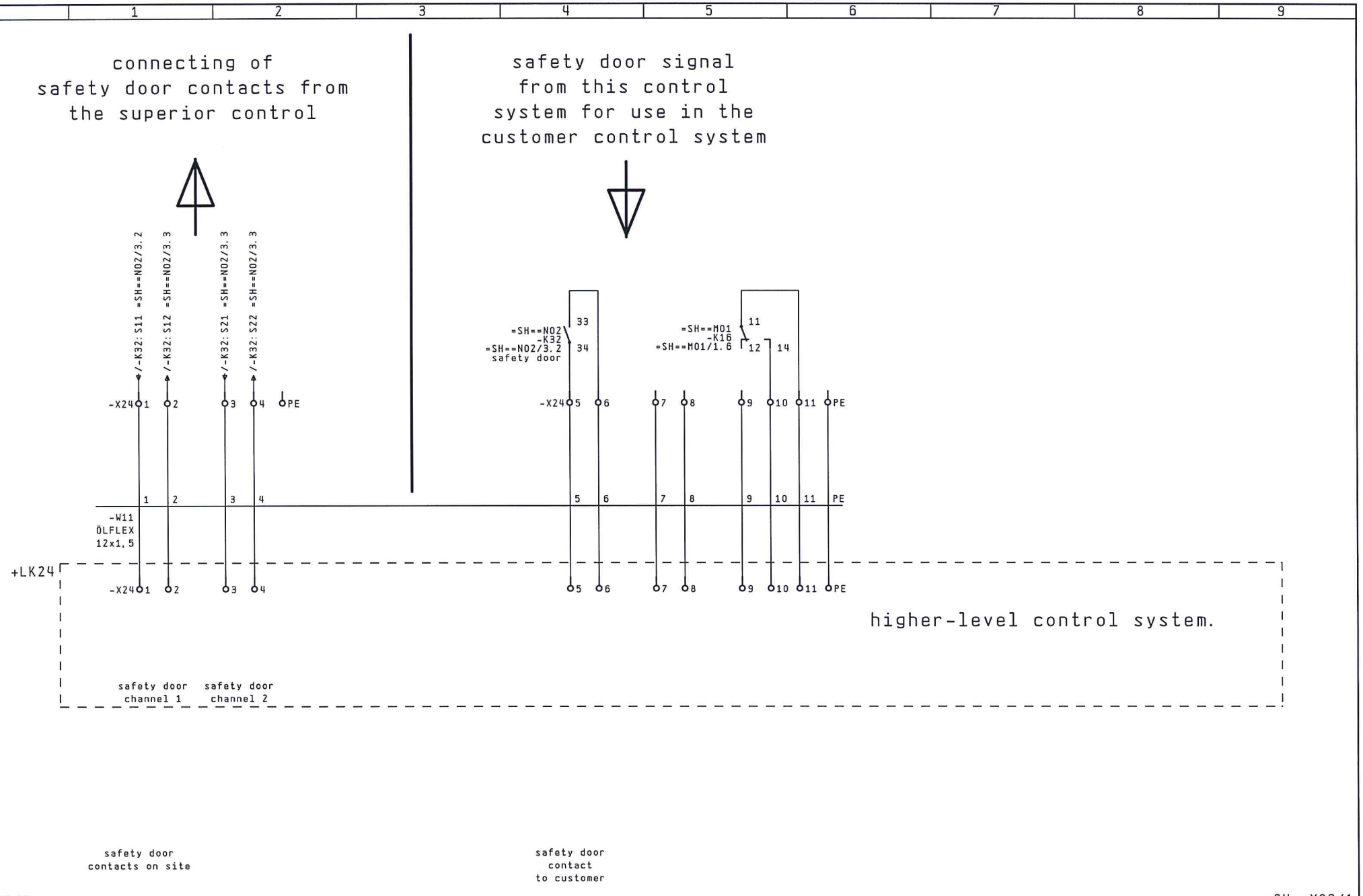

			date	26.08.13	Titan Umreifungstechnik			signal exchange safety door	= SH==X02	+ P01		
			editor	Lo Grasso	Berliner Straße 51-55							
			check.	26.11.13	58332 Schwelm			VS11-H	T13079		Sh.	1
change	date	name	standa	VDE 0100	origin	replace for	replace through	Möllers			1 Sh.	

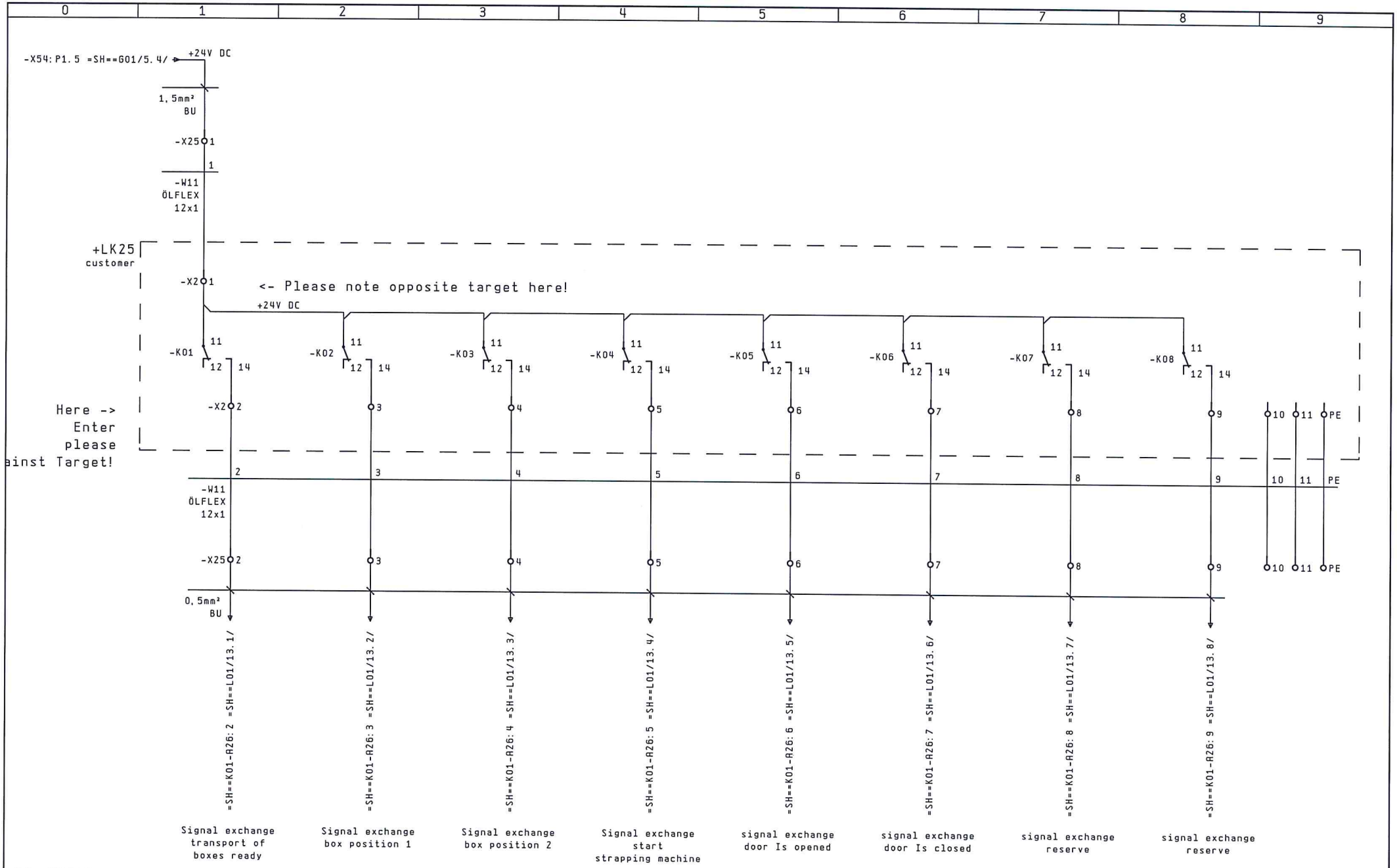

=SH==X02/1

2

			date	26.08.13	Titan Umreifungstechnik	TITAN	signal exchange customer control -> BiNaTec	=SH==X03	+P01
			editor	Lo Grasso	Berliner Straße 51-55				
			check.	26.11.13	58332 Schwelm		VS11-H	T13079	Sh. 1
change	date	name	standa	VDE 0100	origin	replace for	replace through	Möllers		3 Sh.

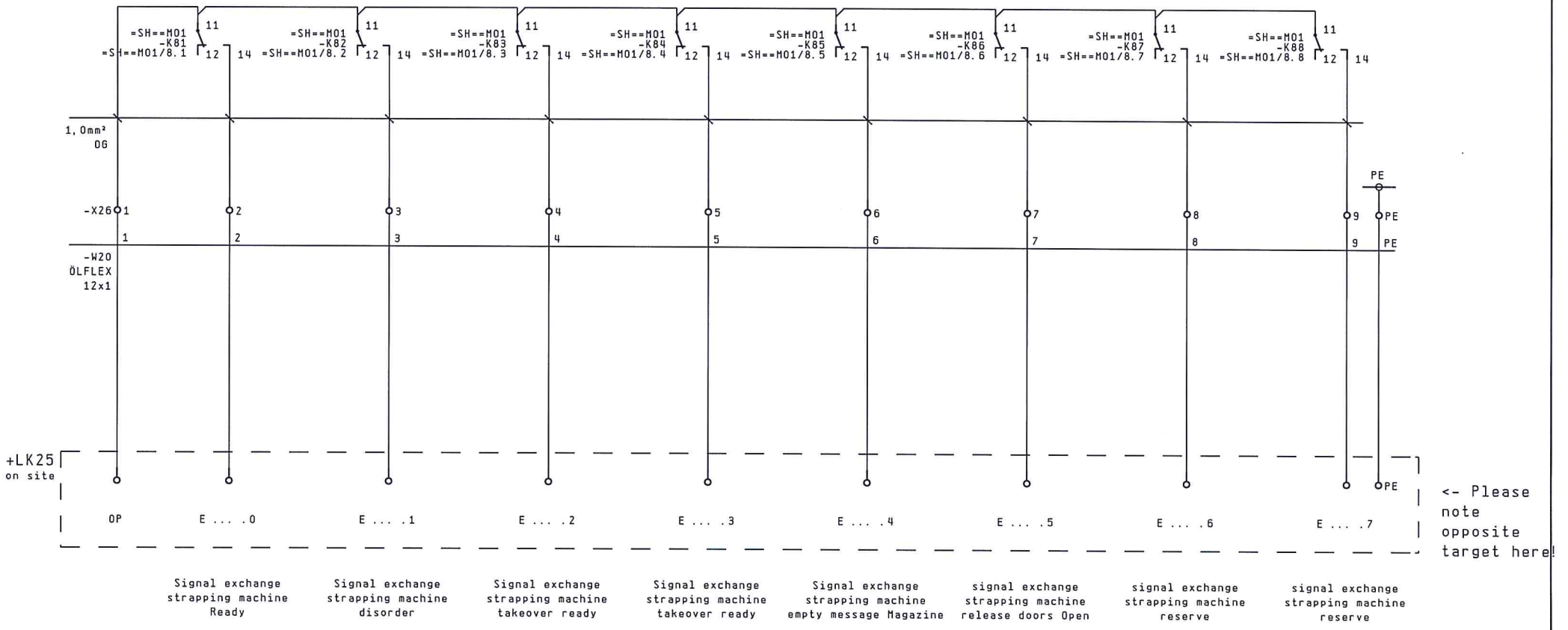

			date	26.08.13	Titan Umreifungstechnik	TITAN	signal exchange BiNaTec -> customer control	= SH==X03	+ P01
			editor	Lo Grasso	Berliner Straße 51-55				
			check.	26.11.13	58332 Schwelm		VS11-H	T13079	Sh. 2
change	date	name	standa	VDE 0100	origin / replace for / replace through		Möllers		3 Sh.

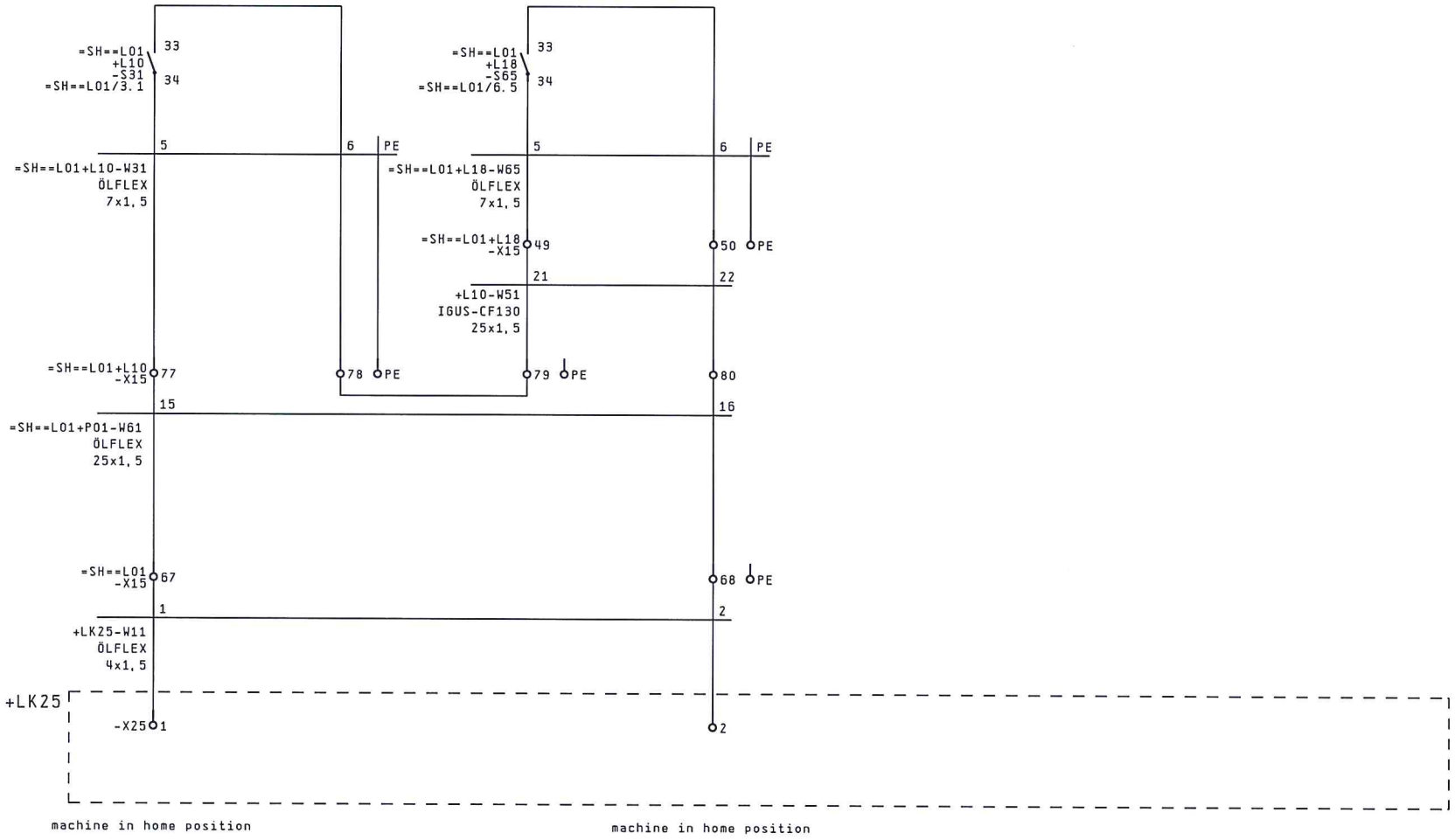

2

=SH==AUSW/1

			date	26.08.13	Titan Umreifungstechnik	TITAN	signal exchange home position	= SH==X03	+ P01		
			editor	Lo Grasso	Berliner Straße 51-55						
			check.	26.11.13	58332 Schwelm		VS11-H	T13079		Sh.	3
change	date	name	standa	VDE 0100	origin	replace for	replace through	Möllers			3 Sh.

BI_A3R1D

terminal strip and connector overview

terminal strip and connector designation	text of the strip definition	terminals / connectors					graphic page of the terminal strip
		first	last	amount PE	amount N	totally amount	
=SH==D01+P01-X1		1	PE	1	0	4	=SH==AUSW+P01/2
=SH==D02+P01-X3		1	PE	1	0	4	=SH==AUSW+P01/3
=SH==D04+P01-X5		1	PE	4	0	9	=SH==AUSW+P01/4
=SH==F01+P01-X11		1	PE	4	0	12	=SH==AUSW+P01/5
=SH==G01+P01-X10		1	PE	2	0	6	=SH==AUSW+P01/6
=SH==G01+P01-X13		1	PE	2	0	10	=SH==AUSW+P01/7
=SH==L01+P01-X15		1	PE	3	0	71	=SH==AUSW+P01/8
=SH==M01+P01-X16		1	PE	2	0	40	=SH==AUSW+P01/11
=SH==N01+P01-X13		1	PE	1	0	15	=SH==AUSW+P01/13
=SH==X01+P01-X23		1	PE	2	0	13	=SH==AUSW+P01/14
=SH==X02+P01-X24		1	PE	2	0	13	=SH==AUSW+P01/15
=SH==X03+P01-X25		1	PE	1	0	12	=SH==AUSW+P01/16
=SH==X03+P01-X26		1	PE	1	0	10	=SH==AUSW+P01/17

			date	26.08.13	Titan Umreifungstechnik	TITAN	Klemmenleisten- und Steckerübersichtsplan	= SH==AUSW	+ P01	
			editor	Lo Grasso	Berliner Straße 51-55					
			check.	26.11.13	58332 Schwelm		VS11-H	T13079		Sh. 1
change	date	name	standa	VDE 0100	origin	replace for	replace through	Möllers		44 Sh.

terminal diagram

BI_A3K2D

function text	=SH==D01+P01-W11 ÖLFLEX	cable name typ	terminal strip designation =SH==D01+P01-X1 target destination	connection	terminal number	jumper	connection name	target destination	connection	cable name typ	page/path
	1		-X11	L1	1	o		-Q11	1		=SH==D01/1.1
	2		-X11	L2	2	o		-Q11	3		=SH==D01/1.1
	3		-X11	L3	3	o		-Q11	5		=SH==D01/1.1
	PE		-X11	PE	PE	o	PE	-PE12	PE		=SH==D01/1.2

1

3

			date	26.08.13	Titan Umreifungstechnik	TITAN	=SH==D01+P01-X1	= SH==AUSW	+ P01
			editor	Lo Grasso	Berliner Straße 51-55				
			check.	26.11.13	58332 Schwelm		VS11-H	T13079	Sh. 2
change	date	name	standa	VDE 0100	origin / replace for / replace through		Möllers		44 Sh.

BI_A3K2D

terminal diagram

function text	=SH==D02+P01-W11	cable name	terminal strip designation =SH==D02+P01-X3							cable name					page/path
	ÖLFLEX	typ	target destination	connection	terminal number	jumper	connection name	target destination	connection	typ					
Antrieb Abroller	1		+L10-X3	1	1	o		=SH==M01-K32	2						=SH==D02/1.2
-	2		+L10-X3	2	2	o		=SH==M01-K32	4						=SH==D02/1.2
-	3		+L10-X3	3	3	o		=SH==M01-K32	6						=SH==D02/1.2
-	PE		+L10-X3	PE	PE	o	PE								=SH==D02/1.2

2 4

			date	26.08.13	Titan Umreifungstechnik	TITAN	=SH==D02+P01-X3	= SH==AUSW / +P01
			editor	Lo Grasso	Berliner Straße 51-55			
			check.	26.11.13	58332 Schwelm		VS11-H	T13079 / Sh. 3
change	date	name	standa	VDE 0100	origin / replace for / replace through		Möllers	44 Sh.

terminal diagram

BI_A3K2D

function text	=SH==D04+P01-W45 ÖLFLEX CY	cable name typ	terminal strip designation =SH==D04+P01-X5 target destination	connection	terminal number	jumper	connection name	target destination	connection	cable name typ	=SH==D04+P01-W45.1 LIYCY				page/path
Hubantrieb Thermistor-Motorschutz	1		-M42	1b	1	o		-A31	14		WH				=SH==D04/4.5
-	2		-M42	2b	2	o		-A31	15		BN				=SH==D04/4.5
Hubantrieb Bremse	3		-Y47	WH	3	o		-V46	13						=SH==D04/4.7
-	4		-Y47	RD	4	o		-V46	14						=SH==D04/4.7
-	5		-Y47	BU	5	o		-V46	15						=SH==D04/4.7
-	PE		-Y47	PE	PE	o									=SH==D04/4.8
					PE	o	PE	-A14	PE						=SH==D04/1.5
					PE	o		-R16	PE						=SH==D04/1.7
Netzschütz Bremse FU Hubantrieb					PE	o		-A21	PE						=SH==D04/2.3

3

5

			date	26.08.13	Titan Umreifungstechnik	TITAN	=SH==D04+P01-X5	= SH==AUSW	+ P01
			editor	Lo Grasso	Berliner Straße 51-55				
			check.	26.11.13	58332 Schwelm		VS11-H	T13079	Sh. 4
change	date	name	standa	VDE 0100	origin / replace for / replace through		Möllers		44 Sh.

BI_A3K2D

terminal diagram

terminal strip designation

=SH==F01+P01-X11

function text	=SH==F01+P01-W24 ÖLFLEX	cable name typ	target destination	connection	terminal number	jumper	connection name	target destination	connection	cable name typ	page/path
Schaltschranksteckdose nur für		X	-X15	L	1			-F15	2	X	=SH==F01/1.5
-		X	-S16	21	2						=SH==F01/1.6
Steuerpult Klimagerät	1		-M17	L	3						=SH==F01/1.7
-					4						=SH==F01/1.8
Schaltschranksteckdose nur für		X	-X15	N	5			-F15	4	X	=SH==F01/1.5
-		X	-E16	N	6						=SH==F01/1.6
Steuerpult Klimagerät	2		-M17	N	7						=SH==F01/1.7
-					8						=SH==F01/1.9
Schaltschranksteckdose nur für		X	-X15	PE	PE						=SH==F01/1.5
-					PE						=SH==F01/1.6
Steuerpult Klimagerät	PE		-M17	PE	PE						=SH==F01/1.8
-					PE						=SH==F01/1.8

			date	26.08.13	Titan Umreifungstechnik	TITAN	=SH==F01+P01-X11	= SH==AUSW	+ P01
			editor	Lo Grasso	Berliner Straße 51-55				
			check.	26.11.13	58332 Schwelm		VS11-H	T13079	Sh. 5
change	date	name	standa	VDE 0100	origin	replace for	replace through	Möllers	44 Sh.

terminal diagram

BI_A3K2D

function text	=SH==G01+P01-W12 ÖLFLEX	=SH==G01+P01-W10 ÖLFLEX	cable name typ	terminal strip designation =SH==G01+P01-X10 target destination	connection	terminal number	jumper	connection name	target destination	connection	cable name typ					page/path
Fremdeinspeisung 230V AC		1		-X11	1	1	o		-F14	1		X				=SH==G01/1.1
.		2		-X11	2	2	o		-F14	3		X				=SH==G01/1.1
.		PE		-X11	PE	PE	o		-PE12	PE						=SH==G01/1.1
.	1			-X12	1	3	o		-F16	1		X				=SH==G01/1.3
.	2			-X12	2	4	o		-F16	3		X				=SH==G01/1.3
.	PE			-X12	PE	PE	o		-PE13	PE						=SH==G01/1.3

5

7

			date	26.08.13	Titan Umreifungstechnik	TITAN	=SH==G01+P01-X10	= SH==AUSW	+ P01
			editor	Lo Grasso	Berliner Straße 51-55				
			check.	26.11.13	58332 Schwelm		VS11-H	T13079	Sh. 6
change	date	name	standa	VDE 0100	origin / replace for / replace through		Möllers		44 Sh.

BI_A3K2D

terminal diagram

terminal strip designation

=SH==G01+P01-X13

function text	=SH==G10+P01-W12 ÖLFLEX	cable name typ	target destination	connection	terminal number	jumper	connection name	target destination	connection	cable name typ	page/path
Maschine Einspeisung DC24V Not-Halt	1		=SH==G10+L10-X13	1	1	o		-X34	P1.2		=SH==G01/8.1
-	2		=SH==G10+L10-X13	3	2	o		-X34	P2.2		=SH==G01/8.2
Maschine Einspeisung DC24V	3		=SH==G10+L10-X13	5	3	o		-X44	P1.1		=SH==G01/8.3
-	4		=SH==G10+L10-X13	7	4	o		-X44	P2.1		=SH==G01/8.4
Maschine Einspeisung DC24V	5		=SH==G10+L10-X13	9	5	o		-X54	P1.7		=SH==G01/8.5
-	6		=SH==G10+L10-X13	13	6	o		-X54	P2.7		=SH==G01/8.6
Maschine Einspeisung DC24V USV	7		=SH==G10+L10-X13	17	7	o		-X74	P1.6		=SH==G01/8.7
-	8		=SH==G10+L10-X13	18	8	o		-X74	P2.6		=SH==G01/8.8
-	PE		=SH==G10+L10-X13	PE	PE	o					=SH==G01/8.9
-					PE	o					=SH==G01/8.9

6

8

			date	26.08.13	Titan Umreifungstechnik	TITAN	=SH==G01+P01-X13	= SH==AUSW + P01
			editor	Lo Grasso	Berliner Straße 51-55			
			check.	26.11.13	58332 Schwelm		VS11-H	T13079 Sh. 7
change	date	name	standa	VDE 0100	origin	replace for / replace through	Möllers	44 Sh.

BI_A3K2D

terminal diagram

terminal strip designation

=SH==L01+P01-X15

function text	=SH==L01+P01-W31	=SH==L01+P01-W71	cable name	target destination	connection	terminal number	jumper	connection name	target destination	connection	cable name	page/path
	ÖLFLEX	ÖLFLEX-FD 855P	typ								typ	
VS11L Bandstopschalter B1		1		+L10-X15	29	1			=SH==G01-X54	P1.14		=SH==L01/7.1
VS11L Klemmposition B4						2						=SH==L01/7.4
VS11L Sicherheitsschalter Klappe						3						=SH==L01/7.5
-						4						=SH==L01/7.6
VS11L Bandstopschalter B1		2		+L10-X15	30	5			=SH==G01-X54	P2.14		=SH==L01/7.1
VS11L Klemmposition B4						6						=SH==L01/7.4
VS11L Sicherheitsschalter Klappe						7						=SH==L01/7.5
VS11L Kopf vor Packstück B7						8						=SH==L01/7.6
VS11L Zählschalter B2		31		+L10-X15	31	9	o		=SH==K01-A25	5		=SH==L01/7.2
-		32		+L10-X15	32	10	o		=SH==K01-A25	3		=SH==L01/7.2
Hubantrieb oben Grundstellung	1			+L10-X15	33	11	o	E6.0	=SH==K01-A21	22		=SH==L01/3.1
-	2			+L10-X15	34	12	o	E6.1	=SH==K01-A21	23		=SH==L01/3.2
Bolzen Hubantrieb	3			+L10-X15	35	13	o	E6.2	=SH==K01-A21	24		=SH==L01/3.3
Hubantrieb unten Stop	4			+L10-X15	36	14	o	E6.3	=SH==K01-A21	25		=SH==L01/3.4
VS11 Aggregat Druckschalter	5			+L10-X15	37	15	o	E6.4	=SH==K01-A21	26		=SH==L01/3.5
Reserve	6			+L10-X15	38	16	o	E6.5	=SH==K01-A21	27		=SH==L01/3.6
-	7			+L10-X15	39	17	o	E6.6	=SH==K01-A21	28		=SH==L01/3.7
-	8			+L10-X15	40	18	o	E6.7	=SH==K01-A21	29		=SH==L01/3.8
Bandspeicher voll	9			+L10-X15	41	19	o	E7.0	=SH==K01-A21	32		=SH==L01/4.1
Bandspeicher leer	10			+L10-X15	42	20	o	E8.5	=SH==K01-A22	7		=SH==L01/4.2
Bandspeicher Bandende	11			+L10-X15	43	21	o	E8.6	=SH==K01-A22	8		=SH==L01/4.3
Bandspeicher füllen	12			+L10-X15	44	22	o	E8.7	=SH==K01-A22	9		=SH==L01/4.4
Bandspeicher Reserve	13			+L10-X15	45	23	o	E7.3	=SH==K01-A21	35		=SH==L01/4.5
Bandspeicher Bandmangel	14			+L10-X15	46	24	o	E7.5	=SH==K01-A21	37		=SH==L01/4.6
Reserve	15			+L10-X15	47	25	o	E7.6	=SH==K01-A21	38		=SH==L01/4.7
Druckschalter Hauptabsperrventil	16			+L10-X15	48	26	o	E7.7	=SH==K01-A21	39		=SH==L01/4.8
Reflexions-Lichtschranke Einlauf	17			+L10-X15	49	27	o	E8.0	=SH==K01-A22	2		=SH==L01/5.1
Reflexions-Lichtschranke Einlauf	18			+L10-X15	50	28	o	E8.1	=SH==K01-A22	3		=SH==L01/5.2
Kanalarmüberwachung am	19			+L10-X15	51	29	o	E8.2	=SH==K01-A22	4		=SH==L01/5.3
Kanalarmüberwachung am Ausleger	20			+L10-X15	52	30	o	E8.3	=SH==K01-A22	5		=SH==L01/5.4
Reflexions-Lichtschranke Auslauf	21			+L10-X15	53	31	o	E8.4	=SH==K01-A22	6		=SH==L01/5.5
Reflexions-Lichtschranke Auslauf	22			+L10-X15	54	32	o	E7.1	=SH==K01-A21	33		=SH==L01/5.6

7 9

			date	26.08.13	Titan Umreifungstechnik	TITAN	=SH==L01+P01-X15		= SH==AUSW	+ P01	
			editor	Lo Grasso	Berliner Straße 51-55						
			check.	26.11.13	58332 Schwelm		VS11-H		T13079		Sh. 8
change	date	name	standa	VDE 0100	origin	replace for	replace through	Möllers			44 Sh.

BI_A3K2D

terminal diagram

terminal strip designation

=SH==L01+P01-X15

function text	=SH==L01+P01-W71	=SH==L01+P01-W61	=SH==L01+P01-W31	cable name	target destination	connection	terminal number	jumper	connection name	target destination	connection	typ	cable name	page/path
	ÖLFLEX-FD 855P	ÖLFLEX	ÖLFLEX	typ										
Reserve			23		+L10-X15	55	33	o	E7.2	=SH==K01-A21	34			=SH==L01/5.7
-			24		+L10-X15	56	34	o	E7.4	=SH==K01-A21	36			=SH==L01/5.8
Bandfangarm 1 Grundstellung Einlauf		1			+L10-X15	57	35	o	E2.0	=SH==K01-A16	2			=SH==L01/6.1
Bandfangarm 1 zum Coil Einlauf		2			+L10-X15	58	36	o	E2.1	=SH==K01-A16	3			=SH==L01/6.2
Bandfangarm 2 Grundstellung Auslauf		3			+L10-X15	59	37	o	E2.2	=SH==K01-A16	4			=SH==L01/6.3
Bandfangarm 2 zum Coil Auslauf		4			+L10-X15	60	38	o	E2.3	=SH==K01-A16	5			=SH==L01/6.4
Umreifungsaggregat hinten		5			+L10-X15	61	39	o	E2.4	=SH==K01-A16	6			=SH==L01/6.5
-		6			+L10-X15	62	40	o	E2.5	=SH==K01-A16	7			=SH==L01/6.6
Umreifungsaggregat vorne		7			+L10-X15	63	41	o	E2.6	=SH==K01-A16	8			=SH==L01/6.7
Reserve		8			+L10-X15	64	42	o	E2.7	=SH==K01-A16	9			=SH==L01/6.8
VS11L Bandstopschalter B1	4				+L10-X15	65	43	o	E9.0	=SH==K01-A22	12			=SH==L01/7.1
VS11L Zählschalter B2	5				+L10-X15	66	44	o		=SH==K01-A25	6			=SH==L01/7.2
VS11L O-Position B3	6				+L10-X15	67	45	o	E9.2	=SH==K01-A22	14			=SH==L01/7.3
VS11L Klemmposition B4	7				+L10-X15	68	46	o	E9.3	=SH==K01-A22	15			=SH==L01/7.4
VS11L Sicherheitsschalter Klappe	8				+L10-X15	69	47	o	E9.4	=SH==K01-A22	16			=SH==L01/7.5
VS11L Kopf vor Packstück B7	9				+L10-X15	70	48	o	E9.5	=SH==K01-A22	17			=SH==L01/7.6
VS11L Kopf auf Packstück B8	10				+L10-X15	71	49	o	E9.6	=SH==K01-A22	18			=SH==L01/7.7
VS11L Service-Schalter Band	11				+L10-X15	72	50	o	E9.7	=SH==K01-A22	19			=SH==L01/7.8
Sitop Select 2 kanaliges					=SH==G01-F22	14	51	o	E11.1	=SH==K01-A22	33			=SH==L01/9.2
Reserve							52	o	E11.2	=SH==K01-A22	34			=SH==L01/9.3
-							53	o	E11.3	=SH==K01-A22	35			=SH==L01/9.4
-							54	o	E11.4	=SH==K01-A22	36			=SH==L01/9.5
-							55	o	E11.5	=SH==K01-A22	37			=SH==L01/9.6
-							56	o	E11.6	=SH==K01-A22	38			=SH==L01/9.7
Anforderung Schutztür soll geöffnet							57	o	E11.7	=SH==K01-A22	39			=SH==L01/9.8
VS11L Service-Schalter Verschluß	12				+L10-X15	73	58	o	E3.0	=SH==K01-A16	12			=SH==L01/10.1
VS11L Reserve	13				+L10-X15	74	59	o	E3.1	=SH==K01-A16	13			=SH==L01/10.2
-	14				+L10-X15	75	60	o	E3.2	=SH==K01-A16	14			=SH==L01/10.3
-							61	o	E3.3	=SH==K01-A16	15			=SH==L01/10.4
-							62	o	E3.4	=SH==K01-A16	16			=SH==L01/10.5
Reserve							63	o	E3.5	=SH==K01-A16	17			=SH==L01/10.6
-							64	o	E3.6	=SH==K01-A16	18			=SH==L01/10.7

8

10

			date	26.08.13	Titan Umreifungstechnik	TITAN	=SH==L01+P01-X15	= SH==AUSW	+ P01
			editor	Lo Grasso	Berliner Straße 51-55				
			check.	26.11.13	58332 Schwelm		VS11-H	T13079	Sh. 9
change	date	name	standa	VDE 0100	origin	replace for	replace through	Möllers	44 Sh.

BI_A3K2D

terminal diagram

terminal strip designation

=SH==L01+P01-X15

function text	=SH==L01+P01-W31	=SH==X03+LK25-W11	cable name	target destination	connection	terminal number	jumper	connection name	target destination	connection	cable name	=SH==L01+P01-W61	page/path
	ÖLFLEX	ÖLFLEX	typ								typ	ÖLFLEX	
Reserve						65	o	E3.7	=SH==K01-A16	19			=SH==L01/10.8
-						66	o						=SH==L01/10.8
Grundstellung Maschine		1		=SH==X03+LK25-X25	1	67	o		+L10-X15	77		15	=SH==X03/3.1
-		2		=SH==X03+LK25-X25	2	68	o		+L10-X15	80		16	=SH==X03/3.4
Druckschalter Hauptabsperrventil	PE			+L10-X15	PE	PE	o						=SH==L01/4.8
Reserve						PE	o						=SH==L01/6.8
Grundstellung Maschine						PE	o						=SH==X03/3.4

9

11

| | | | | | | | |

BI_A3K2D

terminal diagram

terminal strip designation

=SH==M01+P01-X16

function text	=SH==L01+P01-W71	=SH==L01+P01-W61	cable name	target destination	connection	terminal number	jumper	connection name	target destination	connection	cable name	page/path
	ÖLFLEX-FD 855P	ÖLFLEX	typ								typ	
Netzschütz FU Hubantrieb						1	o					=SH==M01/1.2
Reserve						2	o	A12.1	=SH==K01-A23	3		=SH==M01/1.2
-						3	o	A12.2	=SH==K01-A23	4		=SH==M01/1.3
-						4	o	A12.3	=SH==K01-A23	5		=SH==M01/1.4
-						5	o	A12.4	=SH==K01-A23	6		=SH==M01/1.5
-						6	o	A12.6	=SH==K01-A23	8		=SH==M01/1.7
-						7	o	A13.6	=SH==K01-A23	18		=SH==M01/2.2
-						8	o	A13.7	=SH==K01-A23	19		=SH==M01/2.3
Druckluft Hauptabsperrventil		9		+L10-X16	5	9	o	A13.0	=SH==K01-A23	12		=SH==M01/2.4
Horizontaler Fahrschlitten		10		+L10-X16	6	10	o	A13.1	=SH==K01-A23	13		=SH==M01/2.5
Horizontaler Fahrschlitten vorne		11		+L10-X16	7	11	o	A13.2	=SH==K01-A23	14		=SH==M01/2.6
Bandführungsarme öffnen		12		+L10-X16	8	12	o	A13.3	=SH==K01-A23	15		=SH==M01/2.7
Bandführungsarme schließen		13		+L10-X16	9	13	o	A13.4	=SH==K01-A23	16		=SH==M01/2.8
Reserve						14	o	A14.2	=SH==K01-A23	24		=SH==M01/3.3
-						15	o	A14.3	=SH==K01-A23	25		=SH==M01/3.4
-						16	o	A14.4	=SH==K01-A23	26		=SH==M01/3.5
-						17	o	A14.5	=SH==K01-A23	27		=SH==M01/3.6
VS11 Umreifungsaggregat		17		+L10-X16	25	18	o	A14.6	=SH==K01-A23	28		=SH==M01/3.7
Bandklemme auf / zu		18		+L10-X16	27	19	o	A14.7	=SH==K01-A23	29		=SH==M01/3.8
VS11L Luftventil Mittelgang Y1	17			+L10-X16	12	20	o	A2.0	=SH==K01-A16	22		=SH==M01/5.1
VS11L Luftventil Eilgang Y2	18			+L10-X16	13	21	o	A2.1	=SH==K01-A16	23		=SH==M01/5.2
VS11L Transportmotor vor Y3	19			+L10-X16	14	22	o	A2.2	=SH==K01-A16	24		=SH==M01/5.3
VS11L Transportmotor zurück Y4	20			+L10-X16	15	23	o	A2.3	=SH==K01-A16	25		=SH==M01/5.4
VS11L Verschlußmotor Y5	21			+L10-X16	16	24	o	A2.4	=SH==K01-A16	26		=SH==M01/5.5
VS11L Spannmotor Y6	22			+L10-X16	17	25	o	A2.5	=SH==K01-A16	27		=SH==M01/5.6
VS11L Transportwippe Y7	23			+L10-X16	18	26	o	A2.6	=SH==K01-A16	28		=SH==M01/5.7
VS11L Richtvorrichtung Y8	24			+L10-X16	19	27	o	A2.7	=SH==K01-A16	29		=SH==M01/5.8
VS11L Bandstophebel Y9	25			+L10-X16	20	28	o	A3.0	=SH==K01-A16	32		=SH==M01/6.1
VS11L Spannwippe angedrückt Y16	26			+L10-X16	21	29	o	A3.1	=SH==K01-A16	33		=SH==M01/6.2
VS11L Klappe auf Y17	27			+L10-X16	22	30	o	A3.2	=SH==K01-A16	34		=SH==M01/6.3
VS11L Klappe zu Y18	28			+L10-X16	23	31	o	A3.3	=SH==K01-A16	35		=SH==M01/6.4
VS11L Reserve						32	o	A3.4	=SH==K01-A16	36		=SH==M01/6.5

10 12

			date	26.08.13	Titan Umreifungstechnik	TITAN	=SH==M01+P01-X16	= SH==AUSW	+ P01		
			editor	Lo Grasso	Berliner Straße 51-55						
			check.	26.11.13	58332 Schwelm		VS11-H	T13079		Sh. 11	
change	date	name	standa	VDE 0100	origin	replace for	replace through	Möllers			44 Sh.

BI_A3K2D

terminal diagram

terminal strip designation

=SH==M01+P01-X16

function text	=SH==L01+P01-W61	=SH==L01+P01-W71	cable name	target destination	connection	terminal number	jumper	connection name	target destination	connection	cable name	page/path
	ÖLFLEX	ÖLFLEX-FD 855P	typ								typ	
VS11L Reserve						33	o	A3.5	=SH==K01-A16	37		=SH==M01/6.6
-						34	o	A3.6	=SH==K01-A16	38		=SH==M01/6.7
-						35	o	A3.7	=SH==K01-A16	39		=SH==M01/6.8
-		30		+L10-X16	24	36	o		=SH==G01-X34	P1.1		=SH==M01/6.6
Druckluft Hauptabsperrventil	14			+L10-X16	1	37	o		=SH==G01-X44	P2.5		=SH==M01/2.4
VS11L Luftventil Mittelgang Y1		3		+L10-X16	11	38	o		=SH==G01-X34	P2.7		=SH==M01/5.1
Bandführungsarme schließen	PE			+L10-X16	PE	PE	o	PE				=SH==M01/2.8
VS11L Reserve		PE		+L10-X16	PE	PE	o					=SH==M01/6.8

11

13

change	date	name	standa	date	editor	check.
			VDE 0100	26.08.13	Lo Grasso	26.11.13

Titan Umreifungstechnik
Berliner Straße 51-55
58332 Schwelm

origin | replace for | replace through

TITAN

=SH==M01+P01-X16

VS11-H

Möllers

= SH==AUSW | + P01

T13079

Sh. 12
44 Sh.

0 1 2 3 4 5 6 7 8 9

BI_A3K2D

terminal diagram

terminal strip designation

=SH==N01+P01-X13

function text	cable name / typ	target destination	connection	terminal number	jumper	connection name	target destination	connection	cable name / typ					page/path
Not-Halt im Steuerpult		-S11	11	1	o		=SH==X01-X23	5		X				=SH==N01/1.1
-		-S11	12	2	•									=SH==N01/1.2
Not-Halt Reserve				3	•									=SH==N01/1.3
-				4	•		=SH==X01-X23	6						=SH==N01/1.4
Not-Halt im Steuerpult		-S11	21	5	o		=SH==X01-X23	7		X				=SH==N01/1.1
-		-S11	22	6	•									=SH==N01/1.2
Not-Halt Reserve				7	•									=SH==N01/1.3
-				8	•		=SH==X01-X23	8						=SH==N01/1.4
Not-Halt im Steuerpult		-S11	31	9	•		=SH==G01-X64	P1.4						=SH==N01/1.1
Not-Halt Reserve		-X13	12	10	•									=SH==N01/1.3
Not-Halt im Steuerpult		-S11	32	11	o		=SH==K01-A21	18						=SH==N01/1.2
Not-Halt Reserve		-X13	10	12	o		=SH==K01-A21	19						=SH==N01/1.4
-				13	o									=SH==N01/1.4
-				14	o									=SH==N01/1.4
-				PE	o									=SH==N01/1.5

			date	26.08.13	Titan Umreifungstechnik	TITAN	=SH==N01+P01-X13	= SH==AUSW	+ P01
			editor	Lo Grasso	Berliner Straße 51-55				
			check.	26.11.13	58332 Schwelm		VS11-H	T13079	Sh. 13
change	date	name	standa	VDE 0100	origin / replace for / replace through		Möllers		44 Sh.

BI_A3K2D

terminal diagram

terminal strip designation

=SH==X01+P01-X23

function text	=SH==X01+P01-W11	cable name	target destination	connection	terminal number	jumper	connection name	target destination	connection	cable name	page/path
	ÖLFLEX	typ								typ	
Not-Halt vom Kunden	1		+LK23-X23	1	1	o		=SH==N01-K32	S11		=SH==X01/1. 1
-	2		+LK23-X23	2	2	o		=SH==N01-K32	S12		=SH==X01/1. 1
-	3		+LK23-X23	3	3	o		=SH==N01-K32	S21		=SH==X01/1. 2
-	4		+LK23-X23	4	4	o		=SH==N01-K32	S22		=SH==X01/1. 2
Not-Halt zum Kunden	5		+LK23-X23	5	5	o		=SH==N01-X13	1	X	=SH==X01/1. 4
-	6		+LK23-X23	6	6	o		=SH==N01-X13	4		=SH==X01/1. 4
-	7		+LK23-X23	7	7	o		=SH==N01-X13	5	X	=SH==X01/1. 5
-	8		+LK23-X23	8	8	o		=SH==N01-X13	8		=SH==X01/1. 5
-	9		+LK23-X23	9	9	o					=SH==X01/1. 5
-	10		+LK23-X23	10	10	o					=SH==X01/1. 5
Reserve Adern	11		+LK23-X23	11	11	o					=SH==X01/1. 6
Not-Halt vom Kunden					PE	o					=SH==X01/1. 2
Reserve Adern	PE		+LK23-X23	PE	PE	o					=SH==X01/1. 6

13

15

change	date	name					
			date	26.08.13	Titan Umreifungstechnik	TITANO	=SH==X01+P01-X23
			editor	Lo Grasso	Berliner Straße 51-55		VS11-H
			check.	26.11.13	58332 Schwelm		Möllers
			standa	VDE 0100	origin	replace for	replace through

= SH==AUSW | + P01

T13079

Sh. 14
44 Sh.

BI_A3K2D

terminal diagram

terminal strip designation

=SH==X02+P01-X24

function text	=SH==X02+P01-W11	cable name	ÖLFLEX	typ	target destination	connection	terminal number	jumper	connection name	target destination	connection	typ	cable name	page/path
Schutztür Kontakt Bauseits			1		+LK24-X24	1	1	o		=SH==N02-K32	S11			=SH==X02/1.1
-			2		+LK24-X24	2	2	o		=SH==N02-K32	S12			=SH==X02/1.1
-			3		+LK24-X24	3	3	o		=SH==N02-K32	S21			=SH==X02/1.2
-			4		+LK24-X24	4	4	o		=SH==N02-K32	S22			=SH==X02/1.2
Schutztür Kontakt zum Kunden			5		+LK24-X24	5	5	o		=SH==N02-K32	34			=SH==X02/1.4
-			6		+LK24-X24	6	6	o		=SH==N02-K32	33			=SH==X02/1.4
-			7		+LK24-X24	7	7	o						=SH==X02/1.5
-			8		+LK24-X24	8	8	o						=SH==X02/1.5
-			9		+LK24-X24	9	9	o						=SH==X02/1.5
-			10		+LK24-X24	10	10	o		=SH==M01-K16	14			=SH==X02/1.5
-			11		+LK24-X24	11	11	o		=SH==M01-K16	11			=SH==X02/1.6
Schutztür Kontakt Bauseits							PE	o						=SH==X02/1.2
Schutztür Kontakt zum Kunden			PE		+LK24-X24	PE	PE	o						=SH==X02/1.6

14

16

			date	26.08.13	Titan Umreifungstechnik	TITAN	=SH==X02+P01-X24	= SH==AUSW / + P01
			editor	Lo Grasso	Berliner Straße 51-55			
			check.	26.11.13	58332 Schwelm		VS11-H	T13079 / Sh. 15
change	date	name	standa	VDE 0100	origin	replace for / replace through	Möllers	44 Sh.

terminal diagram

BI_A3K2D

function text	=SH==X03+P01-W11 ÖLFLEX	cable name typ	terminal strip designation =SH==X03+P01-X25 target destination	connection	terminal number	jumper	connection name	target destination	connection	cable name typ					page/path
	1		+LK25-X2	1	1	o		=SH==G01-X54	P1.5		X				=SH==X03/1.1
Signalaustausch Kistentransport	2		+LK25-X2	2	2	o		=SH==K01-A26	2			X			=SH==X03/1.1
Signalaustausch Kiste Position 1	3		+LK25-X2	3	3	o		=SH==K01-A26	3			X			=SH==X03/1.2
Signalaustausch Kiste Position 2	4		+LK25-X2	4	4	o		=SH==K01-A26	4			X			=SH==X03/1.3
Signalaustausch Start	5		+LK25-X2	5	5	o		=SH==K01-A26	5			X			=SH==X03/1.4
Signalaustausch Tür geöffnet	6		+LK25-X2	6	6	o		=SH==K01-A26	6			X			=SH==X03/1.5
Signalaustausch Tür geschlossen	7		+LK25-X2	7	7	o		=SH==K01-A26	7			X			=SH==X03/1.6
Signalaustausch Reserve	8		+LK25-X2	8	8	o		=SH==K01-A26	8			X			=SH==X03/1.7
-	9		+LK25-X2	9	9	o		=SH==K01-A26	9			X			=SH==X03/1.8
-	10		+LK25-X2	10	10	o									=SH==X03/1.9
-	11		+LK25-X2	11	11	o									=SH==X03/1.9
-	PE		+LK25-X2	PE	PE	o									=SH==X03/1.9

15

17

			date	26.08.13	Titan Umreifungstechnik	TITAN	=SH==X03+P01-X25	= SH==AUSW	+ P01
			editor	Lo Grasso	Berliner Straße 51-55				
			check.	26.11.13	58332 Schwelm		VS11-H	T13079	Sh. 16
change	date	name	standa	VDE 0100	origin / replace for / replace through		Möllers		44 Sh.

BI_A3K2D

terminal diagram

terminal strip designation

=SH==X03+P01-X26

function text	=SH==X03+P01-W20	cable name	ÖLFLEX	typ	target destination	connection	terminal number	jumper	connection name	target destination	connection	typ	cable name	page/path
	1				+LK25-3X1	0/51	1	o		=SH==M01-K81	11		X	=SH==X03/2.0
Signalaustausch Umreifungsanlage	2				+LK25-3X1	52	2	o		=SH==M01-K81	14		X	=SH==X03/2.1
Signalaustausch Umreifungsanlage	3				+LK25-3X1	54	3	o		=SH==M01-K82	14		X	=SH==X03/2.2
Signalaustausch Umreifungsanlage	4				+LK25-3X1	56	4	o		=SH==M01-K83	14		X	=SH==X03/2.3
Signalaustausch Umreifungsanlage	5				+LK25-3X1	58	5	o		=SH==M01-K84	14		X	=SH==X03/2.4
Signalaustausch Umreifungsanlage	6				+LK25-3X1	60	6	o		=SH==M01-K85	14		X	=SH==X03/2.5
Signalaustausch Umreifungsanlage	7				+LK25-3X1	62	7	o		=SH==M01-K86	14		X	=SH==X03/2.6
Signalaustausch Umreifungsanlage	8				+LK25-3X1	64	8	o		=SH==M01-K87	14		X	=SH==X03/2.7
-	9				+LK25-3X1	66	9	o		=SH==M01-K88	14		X	=SH==X03/2.8
-	PE				+LK25-3X1	PE	PE	o	PE					=SH==X03/2.8

			date	26.08.13	Titan Umreifungstechnik	TITAN	=SH==X03+P01-X26	= SH==AUSW	+ P01
			editor	Lo Grasso	Berliner Straße 51-55				
			check.	26.11.13	58332 Schwelm		VS11-H	T13079	Sh. 17
change	date	name	standa	VDE 0100	origin	replace for	replace through	Möllers		44 Sh.

BI_A3S2D

cable overview

cable name cable designation	source by	target to	cable type	total cores	used cores	cross-section mmř	m	remark	graphics - page
=SH==D01+P01-W11	=SH==D01-X1	=SH==D01-X11	ÖLFLEX	4/PE	4/PE	2.5	-		/19
=SH==D02+P01-W11	=SH==D02-X3	=SH==D02+L10-X3	ÖLFLEX	4/PE	4/PE	1.5	-		/20
=SH==D04+P01-W37	=SH==D04-X37	=SH==K01-X12	DP-Leitung (VT)	2+SH	2	0.64	-	Intern	/21
=SH==D04+P01-W42	=SH==D04-A14	=SH==D04-M42	ÖLFLEX CY	4/PE+SH	4/PE	1.5	-		/22
=SH==D04+P01-W45			ÖLFLEX CY	7/PE+SH	6/PE+SH	1.5	-		/23
	=SH==D04-X5	=SH==D04-M42		7/PE+SH	2	1.5			/23
	=SH==D04-X5	=SH==D04-Y47		7/PE+SH	4/PE	1.5			/23
	=SH==D04-X5	SH		7/PE+SH	0+SH	1.5			/23
=SH==D04+P01-W45.1			LIYCY	2+SH	2+SH	0.5	-	Intern	/24
	=SH==D04-X5	=SH==D04-A31		2+SH	2	0.5		Intern	/24
	=SH==D04-X5	SH		2+SH	0+SH	0.5		Intern	/24
=SH==D04+P01-W53	=SH==D04-A51-X1	=SH==K01-X121	DP-Leitung (VT)	2+SH	2	0.64	-		/25
=SH==F01+P01-W24	=SH==F01-X11	=SH==F01-M17	ÖLFLEX	3/PE	3/PE	1.5	-		/26
=SH==G01+P01-W10	=SH==G01-X10	=SH==G01-X11	ÖLFLEX	3/PE	3/PE	1.5	-		/27
=SH==G01+P01-W12	=SH==G01-X10	=SH==G01-X12	ÖLFLEX	3/PE	3/PE	1.5	-		/28
=SH==K01+P01-W121	=SH==D04-X37	=SH==K01-X121	DP-Leitung (VT)	2+SH	2	0.64	-	Intern	/29
=SH==L01+P01-W31	=SH==L01-X15	=SH==L01+L10-X15	ÖLFLEX	25/PE	25/PE	1.5	-		/30
=SH==L01+P01-W35	=SH==L01+L10-X15	=SH==L01+L10-S35	ÖLFLEX	4/PE	4/PE	0.5	-		/31
=SH==L01+P01-W61			ÖLFLEX	25/PE	19/PE	1.5	-		/32
	=SH==L01-X15	=SH==L01+L10-X15		25/PE	10	1.5			/32
	=SH==M01-X16	=SH==M01+L10-X16		25/PE	9/PE	1.5			/32
=SH==L01+P01-W71			ÖLFLEX-FD 855P	36/PE	30/PE	1	-		/33
	=SH==L01-X15	=SH==L01+L10-X15		36/PE	15	1			/33
	=SH==M01-X16	=SH==M01+L10-X16		36/PE	15/PE	1			/33
=SH==L01+P01-W76	=SH==L01+L18-X15	=SH==L01+L18-B76	PUR	4	3	0.34	-		/34
=SH==L01+P01-W77	=SH==L01+L18-X15	=SH==L01+L18-B77	PUR	4	3	0.34	-		/35
=SH==G10+P01-W12	=SH==G01-X13	=SH==G10+L10-X13	ÖLFLEX	12/PE	9/PE	1.5	-		/36
=SH==X01+P01-W11	=SH==X01-X23	=SH==X01+LK23-X23	ÖLFLEX	12/PE	12/PE	1.5	-		/37
=SH==X02+P01-W11	=SH==X02-X24	=SH==X02+LK24-X24	ÖLFLEX	12/PE	12/PE	1.5	-		/38
=SH==X03+P01-W11	=SH==X03-X25	=SH==X03+LK25-X2	ÖLFLEX	12/PE	12/PE	1	-		/39
=SH==X03+P01-W20	=SH==X03-X26	=SH==X03+LK25-3X1	ÖLFLEX	12/PE	10/PE	1	-		/40

			date	26.08.13	Titan Umreifungstechnik Berliner Straße 51-55 58332 Schwelm	TITAN	Kabelübersicht VS11-H	= SH==AUSW	+ P01
			editor	Lo Grasso				T13079	Sh. 18
			check.	26.11.13					44 Sh.
change	date	name	standa	VDE 0100	origin / replace for / replace through		Möllers		

BI_A3N1D

interconnection diagram

cable name =SH==D01+P01-W11		cable type ÖLFLEX	
remark		no. of cores 4/PE	cross-section 2.5	cable length –

function text	page/path	destinaton from	pin	core	destinaton to	pin	page/path	function text
	=SH==D01/1.1	=SH==D01-X1	1	1	=SH==D01-X11	L1	=SH==D01/1.1	Einspeisung Bauseitig Vorsicherung 20A
	=SH==D01/1.1	=SH==D01-X1	2	2	=SH==D01-X11	L2	=SH==D01/1.1	Einspeisung Bauseitig Vorsicherung 20A
	=SH==D01/1.1	=SH==D01-X1	3	3	=SH==D01-X11	L3	=SH==D01/1.1	Einspeisung Bauseitig Vorsicherung 20A
	=SH==D01/1.2	=SH==D01-X1	PE	PE	=SH==D01-X11	PE	=SH==D01/1.1	Einspeisung Bauseitig Vorsicherung 20A

			date	26.08.13	Titan Umreifungstechnik	TITAN	=SH==D01+P01-W11	= SH==AUSW	+ P01
			editor	Lo Grasso	Berliner Straße 51-55				
			check.	26.11.13	58332 Schwelm		VS11-H	T13079	Sh. 19
change	date	name	standa	VDE 0100	origin	replace for / replace through	Möllers		44 Sh.

BI_A3N1D

interconnection diagram

cable name	=SH==D02+P01-W11	cable type	ÖLFLEX		
remark		no. of cores	4/PE	cross-section	1.5

function text	page/path	destinaton from	pin	core	destinaton to	pin	page/path	function text
Antrieb Abroller	=SH==D02/1.2	=SH==D02-X3	1	1	=SH==D02+L10-X3	1	=SH==D02/1.2	Antrieb Abroller
Antrieb Abroller	=SH==D02/1.2	=SH==D02-X3	2	2	=SH==D02+L10-X3	2	=SH==D02/1.2	Antrieb Abroller
Antrieb Abroller	=SH==D02/1.2	=SH==D02-X3	3	3	=SH==D02+L10-X3	3	=SH==D02/1.2	Antrieb Abroller
Antrieb Abroller	=SH==D02/1.2	=SH==D02-X3	PE	PE	=SH==D02+L10-X3	PE	=SH==D02/1.2	Antrieb Abroller

19

21

change	date	name	standa	date	editor	check.	origin	replace for	replace through
			VDE 0100	26.08.13	Lo Grasso	26.11.13			

Titan Umreifungstechnik
Berliner Straße 51-55
58332 Schwelm

TITAN

=SH==D02+P01-W11
VS11-H
Möllers

= SH==AUSW
T13079

+ P01

Sh. 20
44 Sh.

BI_A3N1D

interconnection diagram

cable name =SH==D04+P01-W37		cable type DP-Leitung (VT)	
remark Intern		no. of cores 2+SH	cross-section 0.64	cable length –

function text	page/path	destinaton from	pin	core	destinaton to	pin	page/path	function text
FU Hubantrieb Meldung von Relais 2	=SH==D04/3.8	=SH==D04-X37	B1	RD	=SH==K01-X12	B2	=SH==K01/1.3	FU Hubantrieb Meldung von Relais 2
FU Hubantrieb Meldung von Relais 2	=SH==D04/3.7	=SH==D04-X37	A1	GN	=SH==K01-X12	A2	=SH==K01/1.3	FU Hubantrieb Meldung von Relais 2
				SH				

20

22

			date	26.08.13	Titan Umreifungstechnik	TITAN	=SH==D04+P01-W37	= SH==AUSW	+ P01
			editor	Lo Grasso	Berliner Straße 51-55				
			check.	26.11.13	58332 Schwelm		VS11-H	T13079	Sh. 21
change	date	name	standa	VDE 0100	origin	replace for	replace through	Möllers		44 Sh.

BI_A3N1D

interconnection diagram

cable name	=SH==D04+P01-W42	cable type	ÖLFLEX CY		
remark		no. of cores	4/PE+SH	cross-section	1.5

function text	page/path	destinaton from	pin	core	destinaton to	pin	page/path	function text
	=SH==D04/1.4	=SH==D04-A14	U2	1	=SH==D04-M42	U1	=SH==D04/4.2	Hubantrieb
	=SH==D04/1.4	=SH==D04-A14	V2	2	=SH==D04-M42	V1	=SH==D04/4.2	Hubantrieb
	=SH==D04/1.4	=SH==D04-A14	W2	3	=SH==D04-M42	W1	=SH==D04/4.2	Hubantrieb
	=SH==D04/1.5	=SH==D04-A14	PE	PE	=SH==D04-M42	PE	=SH==D04/4.3	Hubantrieb
				SH				

21

23

change	date	name	standa	date	editor	check.	origin	replace for	replace through
			VDE 0100	26.08.13	Lo Grasso	26.11.13	Titan Umreifungstechnik Berliner Straße 51-55 58332 Schwelm		

TITAN

=SH==D04+P01-W42

VS11-H

Möllers

= SH==AUSW

+ P01

T13079

Sh. 22

44 Sh.

BI_A3N1D

interconnection diagram

cable name =SH==D04+P01-W45		cable type ÖLFLEX CY	
remark		no. of cores 7/PE+SH	cross-section 1.5	cable length –

function text	page/path	destinaton from	pin	core	destinaton to	pin	page/path	function text
Hubantrieb Thermistor-Motorschutz	=SH==D04/4.5	=SH==D04-X5	1	1	=SH==D04-M42	1b	=SH==D04/4.3	Hubantrieb
Hubantrieb Thermistor-Motorschutz	=SH==D04/4.5	=SH==D04-X5	2	2	=SH==D04-M42	2b	=SH==D04/4.2	Hubantrieb
Hubantrieb Bremse	=SH==D04/4.7	=SH==D04-X5	3	3	=SH==D04-Y47	WH	=SH==D04/4.7	Hubantrieb Bremse
Hubantrieb Bremse	=SH==D04/4.7	=SH==D04-X5	4	4	=SH==D04-Y47	RD	=SH==D04/4.8	Hubantrieb Bremse
Hubantrieb Bremse	=SH==D04/4.7	=SH==D04-X5	5	5	=SH==D04-Y47	BU	=SH==D04/4.7	Hubantrieb Bremse
				6				
Hubantrieb Bremse	=SH==D04/4.8	=SH==D04-X5	PE	PE	=SH==D04-Y47	PE	=SH==D04/4.8	Hubantrieb Bremse
Hubantrieb Bremse	=SH==D04/4.8	=SH==D04-X5	SHV	SH	SH		=SH==D04/4.8	Hubantrieb Bremse

change	date	name					
			date	26.08.13	Titan Umreifungstechnik	TITAN	=SH==D04+P01-W45
			editor	Lo Grasso	Berliner Straße 51-55		
			check.	26.11.13	58332 Schwelm		VS11-H
			standa	VDE 0100	origin	replace for	replace through

= SH==AUSW	+ P01	
T13079		Sh. 23
		44 Sh.

Möllers

BI_A3N1D

interconnection diagram

cable name	=SH==D04+P01-W45.1	cable type	LIYCY		
remark	Intern	no. of cores	2+SH	cross-section	0.5	cable length	-

function text	page/path	destinaton from	pin	core	destinaton to	pin	page/path	function text
Hubantrieb Thermistor-Motorschutz	=SH==D04/4.5	=SH==D04-X5	1	WH	=SH==D04-A31	14	=SH==D04/3.1	
Hubantrieb Thermistor-Motorschutz	=SH==D04/4.5	=SH==D04-X5	2	BN	=SH==D04-A31	15	=SH==D04/3.1	
Hubantrieb Bremse	=SH==D04/4.8	=SH==D04-X5	SHV	SH	SH		=SH==D04/4.5	Hubantrieb Thermistor-Motorschutz

23

25

change	date	name	standa	VDE 0100	origin	replace for	replace through
			date	26.08.13			
			editor	Lo Grasso			
			check.	26.11.13			

Titan Umreifungstechnik
Berliner Straße 51-55
58332 Schwelm

TITAN

=SH==D04+P01-W45.1
VS11-H
Möllers

= SH==AUSW
T13079

+ P01

BI_A3N1D

interconnection diagram

cable name =SH==D04+P01-W53		cable type DP-Leitung (VT)	
remark		no. of cores 2+SH	cross-section 0.64	cable length –

function text	page/path	destinaton from	pin	core	destinaton to	pin	page/path	function text
Absolutwertgeber Hubantrieb	=SH==D04/5.3	=SH==D04-A51-X1	2	RD	=SH==K01-X121	A2	=SH==K01/12.2	Absolutwertgeber Hubantrieb
Absolutwertgeber Hubantrieb	=SH==D04/5.3	=SH==D04-A51-X1	1	GN	=SH==K01-X121	B2	=SH==K01/12.2	Absolutwertgeber Hubantrieb
				SH				

			date	26.08.13	Titan Umreifungstechnik	TITAN	=SH==D04+P01-W53	= SH==AUSW	+ P01
			editor	Lo Grasso	Berliner Straße 51-55				
			check.	26.11.13	58332 Schwelm		VS11-H	T13079	Sh. 25
change	date	name	standa	VDE 0100	origin	replace for / replace through	Möllers		44 Sh.

0	1	2	3	4	5	6	7	8	9

BI_A3N1D

interconnection diagram

cable name =SH==F01+P01-W24	cable type ÖLFLEX		
remark	no. of cores 3/PE	cross-section 1.5	cable length -

function text	page/path	destinaton from	pin	core	destinaton to	pin	page/path	function text
Steuerpult Klimagerät	=SH==F01/1.7	=SH==F01-X11	3	1	=SH==F01-M17	L	=SH==F01/1.7	Schaltschranksteckdose nur für
Steuerpult Klimagerät	=SH==F01/1.7	=SH==F01-X11	7	2	=SH==F01-M17	N	=SH==F01/1.7	Schaltschranksteckdose nur für
Steuerpult Klimagerät	=SH==F01/1.8	=SH==F01-X11	PE	PE	=SH==F01-M17	PE	=SH==F01/1.7	Schaltschranksteckdose nur für

25

27

			date	26.08.13	Titan Umreifungstechnik	TITAN	=SH==F01+P01-W24	= SH==AUSW	+ P01
			editor	Lo Grasso	Berliner Straße 51-55				
			check.	26.11.13	58332 Schwelm		VS11-H	T13079	Sh. 26
change	date	name	standa	VDE 0100	origin / replace for / replace through		Möllers		44 Sh.

0 1 2 3 4 5 6 7 8 9

BI_A3N1D

interconnection diagram

cable name =SH==G01+P01-W10	cable type ÖLFLEX		
remark	no. of cores 3/PE	cross-section 1.5	cable length –

function text	page/path	destinaton from	pin	core	destinaton to	pin	page/path	function text
Fremdeinspeisung 230V AC	=SH==G01/1.1	=SH==G01-X10	1	1	=SH==G01-X11	1	=SH==G01/1.1	Fremdeinspeisung Bauseits Vorsicherung
Fremdeinspeisung 230V AC	=SH==G01/1.1	=SH==G01-X10	2	2	=SH==G01-X11	2	=SH==G01/1.1	Fremdeinspeisung Bauseits Vorsicherung
Fremdeinspeisung 230V AC	=SH==G01/1.1	=SH==G01-X10	PE	PE	=SH==G01-X11	PE	=SH==G01/1.1	Fremdeinspeisung Bauseits Vorsicherung

			date	26.08.13	Titan Umreifungstechnik	TITAN	=SH==G01+P01-W10	= SH==AUSW	+ P01
			editor	Lo Grasso	Berliner Straße 51-55				
			check.	26.11.13	58332 Schwelm		VS11-H	T13079	Sh. 27
change	date	name	standa	VDE 0100	origin / replace for / replace through		Möllers		44 Sh.

BI_A3N1D

interconnection diagram

cable name	=SH==G01+P01-W12	cable type	ÖLFLEX		
remark		no. of cores	3/PE	cross-section	1.5

function text	page/path	destinaton from	pin	core	destinaton to	pin	page/path	function text
Fremdeinspeisung 230V AC	=SH==G01/1.3	=SH==G01-X10	3	1	=SH==G01-X12	1	=SH==G01/1.2	Fremdeinspeisung Bauseits Vorsicherung
Fremdeinspeisung 230V AC	=SH==G01/1.3	=SH==G01-X10	4	2	=SH==G01-X12	2	=SH==G01/1.2	Fremdeinspeisung Bauseits Vorsicherung
Fremdeinspeisung 230V AC	=SH==G01/1.3	=SH==G01-X10	PE	PE	=SH==G01-X12	PE	=SH==G01/1.2	Fremdeinspeisung Bauseits Vorsicherung

27

29

change	date	name	standa	date	editor	check.	origin	replace for	replace through
			VDE 0100	26.08.13	Lo Grasso	26.11.13	Titan Umreifungstechnik Berliner Straße 51-55 58332 Schwelm		

TITAN

=SH==G01+P01-W12

VS11-H

Möllers

= SH==AUSW

+ P01

T13079

Sh. 28

44 Sh.

BI_A3N1D

interconnection diagram

cable name =SH==K01+P01-W121			cable type DP-Leitung (VT)	
remark Intern		no. of cores 2+SH	cross-section 0.64	cable length –

function text	page/path	destinaton from	pin	core	destinaton to	pin	page/path	function text
	=SH==D04/3.8	=SH==D04-X37	B2	RD	=SH==K01-X121	B1	=SH==K01/12.1	
	=SH==D04/3.8	=SH==D04-X37	A2	GN	=SH==K01-X121	A1	=SH==K01/12.1	
				SH				

28

30

			date	26.08.13	Titan Umreifungstechnik	TITAN	=SH==K01+P01-W121	= SH==AUSW	+ P01		
			editor	Lo Grasso	Berliner Straße 51-55						
			check.	26.11.13	58332 Schwelm		VS11-H	T13079		Sh. 29	
change	date	name	standa	VDE 0100	origin	replace for	replace through	Möllers			44 Sh.

BI_A3N1D

interconnection diagram

cable name	=SH==L01+P01-W31	cable type	ÖLFLEX		
remark		no. of cores	25/PE	cross-section	1.5

function text	page/path	destinaton from	pin	core	destinaton to	pin	page/path	function text
Hubantrieb oben Grundstellung	=SH==L01/3.1	=SH==L01-X15	11	1	=SH==L01+L10-X15	33	=SH==L01/3.1	Hubantrieb oben Grundstellung
Hubantrieb oben Grundstellung	=SH==L01/3.2	=SH==L01-X15	12	2	=SH==L01+L10-X15	34	=SH==L01/3.2	Hubantrieb oben Grundstellung
Bolzen Hubantrieb	=SH==L01/3.3	=SH==L01-X15	13	3	=SH==L01+L10-X15	35	=SH==L01/3.3	Bolzen Hubantrieb
Hubantrieb unten Stop	=SH==L01/3.4	=SH==L01-X15	14	4	=SH==L01+L10-X15	36	=SH==L01/3.4	Hubantrieb unten Stop
VS11 Aggregat Druckschalter Druckluft	=SH==L01/3.5	=SH==L01-X15	15	5	=SH==L01+L10-X15	37	=SH==L01/3.5	VS11 Aggregat Druckschalter Druckluft
Reserve	=SH==L01/3.6	=SH==L01-X15	16	6	=SH==L01+L10-X15	38	=SH==L01/3.6	Reserve
Reserve	=SH==L01/3.7	=SH==L01-X15	17	7	=SH==L01+L10-X15	39	=SH==L01/3.7	Reserve
Reserve	=SH==L01/3.8	=SH==L01-X15	18	8	=SH==L01+L10-X15	40	=SH==L01/3.8	Reserve
Bandspeicher voll	=SH==L01/4.1	=SH==L01-X15	19	9	=SH==L01+L10-X15	41	=SH==L01/4.1	Bandspeicher voll
Bandspeicher leer	=SH==L01/4.2	=SH==L01-X15	20	10	=SH==L01+L10-X15	42	=SH==L01/4.2	Bandspeicher leer
Bandspeicher Bandende	=SH==L01/4.3	=SH==L01-X15	21	11	=SH==L01+L10-X15	43	=SH==L01/4.3	Bandspeicher Bandende
Bandspeicher füllen	=SH==L01/4.4	=SH==L01-X15	22	12	=SH==L01+L10-X15	44	=SH==L01/4.4	Bandspeicher füllen
Bandspeicher Reserve	=SH==L01/4.5	=SH==L01-X15	23	13	=SH==L01+L10-X15	45	=SH==L01/4.5	Bandspeicher Reserve
Bandspeicher Bandmangel	=SH==L01/4.6	=SH==L01-X15	24	14	=SH==L01+L10-X15	46	=SH==L01/4.6	Bandspeicher Bandmangel
Reserve	=SH==L01/4.7	=SH==L01-X15	25	15	=SH==L01+L10-X15	47	=SH==L01/4.7	Reserve
Druckschalter Hauptabsperrventil	=SH==L01/4.8	=SH==L01-X15	26	16	=SH==L01+L10-X15	48	=SH==L01/4.8	Druckschalter Hauptabsperrventil
Reflexions-Lichtschranke Einlauf	=SH==L01/5.1	=SH==L01-X15	27	17	=SH==L01+L10-X15	49	=SH==L01/5.1	Reflexions-Lichtschranke Einlauf
Reflexions-Lichtschranke Einlauf innen	=SH==L01/5.2	=SH==L01-X15	28	18	=SH==L01+L10-X15	50	=SH==L01/5.2	Reflexions-Lichtschranke Einlauf innen
Kanalarmüberwachung am	=SH==L01/5.3	=SH==L01-X15	29	19	=SH==L01+L10-X15	51	=SH==L01/5.3	Kanalarmüberwachung am
Kanalarmüberwachung am Ausleger	=SH==L01/5.4	=SH==L01-X15	30	20	=SH==L01+L10-X15	52	=SH==L01/5.4	Kanalarmüberwachung am Ausleger
Reflexions-Lichtschranke Auslauf innen	=SH==L01/5.5	=SH==L01-X15	31	21	=SH==L01+L10-X15	53	=SH==L01/5.5	Reflexions-Lichtschranke Auslauf innen
Reflexions-Lichtschranke Auslauf	=SH==L01/5.6	=SH==L01-X15	32	22	=SH==L01+L10-X15	54	=SH==L01/5.6	Reflexions-Lichtschranke Auslauf
Reserve	=SH==L01/5.7	=SH==L01-X15	33	23	=SH==L01+L10-X15	55	=SH==L01/5.7	Reserve
Reserve	=SH==L01/5.8	=SH==L01-X15	34	24	=SH==L01+L10-X15	56	=SH==L01/5.8	Reserve
Druckschalter Hauptabsperrventil	=SH==L01/4.8	=SH==L01-X15	PE	PE	=SH==L01+L10-X15	PE	=SH==L01/3.5	VS11 Aggregat Druckschalter Druckluft

29

31

change	date	name	standa	VDE 0100	origin	replace for	replace through
			date	26.08.13			
			editor	Lo Grasso			
			check.	26.11.13			

Titan Umreifungstechnik
Berliner Straße 51-55
58332 Schwelm

TITAN

=SH==L01+P01-W31

VS11-H

Möllers

= SH==AUSW

+ P01

T13079

Sh. 30
44 Sh.

BI_A3N1D

interconnection diagram

cable name	=SH==L01+P01-W35	cable type	ÖLFLEX		
remark		no. of cores	4/PE	cross-section	0.5

function text	page/path	destinaton from	pin	core	destinaton to	pin	page/path	function text
VS11 Aggregat Druckschalter Druckluft	=SH==L01/3.5	=SH==L01+L10-X15	5	1	=SH==L01+L10-S35	1	=SH==L01/3.5	Hubantrieb unten Stop
VS11 Aggregat Druckschalter Druckluft	=SH==L01/3.5	=SH==L01+L10-X15	19	2	=SH==L01+L10-S35	4	=SH==L01/3.5	Hubantrieb unten Stop
VS11 Aggregat Druckschalter Druckluft	=SH==L01/3.5	=SH==L01+L10-X15	37	3	=SH==L01+L10-S35	2	=SH==L01/3.5	Hubantrieb unten Stop
VS11 Aggregat Druckschalter Druckluft	=SH==L01/3.5	=SH==L01+L10-X15	PE	PE	=SH==L01+L10-S35	PE	=SH==L01/3.5	Hubantrieb unten Stop

change	date	name	standa	date	editor	check.	origin	replace for	replace through
			VDE 0100	26.08.13	Lo Grasso	26.11.13	Titan Umreifungstechnik Berliner Straße 51-55 58332 Schwelm		

TITAN

=SH==L01+P01-W35

VS11-H

Möllers

= SH==AUSW

+ P01

T13079

Sh. 31

44 Sh.

BI_A3N1D

interconnection diagram

cable name	=SH==L01+P01-W61	cable type	ÖLFLEX		
remark		no. of cores	25/PE	cross-section	1.5

function text	page/path	destinaton from	pin	core	destinaton to	pin	page/path	function text
Bandfangarm 1 Grundstellung Einlauf	=SH==L01/6.1	=SH==L01-X15	35	1	=SH==L01+L10-X15	57	=SH==L01/6.1	Bandfangarm 1 Grundstellung Einlauf
Bandfangarm 1 zum Coil Einlauf links	=SH==L01/6.2	=SH==L01-X15	36	2	=SH==L01+L10-X15	58	=SH==L01/6.2	Bandfangarm 1 zum Coil Einlauf links
Bandfangarm 2 Grundstellung Auslauf	=SH==L01/6.3	=SH==L01-X15	37	3	=SH==L01+L10-X15	59	=SH==L01/6.3	Bandfangarm 2 Grundstellung Auslauf
Bandfangarm 2 zum Coil Auslauf rechts	=SH==L01/6.4	=SH==L01-X15	38	4	=SH==L01+L10-X15	60	=SH==L01/6.4	Bandfangarm 2 zum Coil Auslauf rechts
Umreifungsaggregat hinten	=SH==L01/6.5	=SH==L01-X15	39	5	=SH==L01+L10-X15	61	=SH==L01/6.5	Umreifungsaggregat hinten
Umreifungsaggregat hinten	=SH==L01/6.6	=SH==L01-X15	40	6	=SH==L01+L10-X15	62	=SH==L01/6.6	Umreifungsaggregat hinten
Umreifungsaggregat vorne	=SH==L01/6.7	=SH==L01-X15	41	7	=SH==L01+L10-X15	63	=SH==L01/6.7	Umreifungsaggregat vorne
Reserve	=SH==L01/6.8	=SH==L01-X15	42	8	=SH==L01+L10-X15	64	=SH==L01/6.8	Reserve
Druckluft Hauptabsperrventil	=SH==M01/2.4	=SH==M01-X16	9	9	=SH==M01+L10-X16	5	=SH==M01/2.4	Druckluft Hauptabsperrventil
Horizontaler Fahrschlitten	=SH==M01/2.5	=SH==M01-X16	10	10	=SH==M01+L10-X16	6	=SH==M01/2.5	Horizontaler Fahrschlitten
Horizontaler Fahrschlitten vorne	=SH==M01/2.6	=SH==M01-X16	11	11	=SH==M01+L10-X16	7	=SH==M01/2.6	Horizontaler Fahrschlitten vorne
Bandführungsarme öffnen Grundstellung	=SH==M01/2.7	=SH==M01-X16	12	12	=SH==M01+L10-X16	8	=SH==M01/2.7	Bandführungsarme öffnen Grundstellung
Bandführungsarme schließen	=SH==M01/2.8	=SH==M01-X16	13	13	=SH==M01+L10-X16	9	=SH==M01/2.8	Bandführungsarme schließen
Druckluft Hauptabsperrventil	=SH==M01/2.4	=SH==M01-X16	37	14	=SH==M01+L10-X16	1	=SH==M01/2.4	Druckluft Hauptabsperrventil
Grundstellung Maschine	=SH==X03/3.1	=SH==L01-X15	67	15	=SH==L01+L10-X15	77	=SH==X03/3.1	Grundstellung Maschine
Grundstellung Maschine	=SH==X03/3.4	=SH==L01-X15	68	16	=SH==L01+L10-X15	80	=SH==X03/3.4	Grundstellung Maschine
VS11 Umreifungsaggregat	=SH==M01/3.7	=SH==M01-X16	18	17	=SH==M01+L10-X16	25	=SH==M01/3.7	VS11 Umreifungsaggregat
Bandklemme auf / zu	=SH==M01/3.8	=SH==M01-X16	19	18	=SH==M01+L10-X16	27	=SH==M01/3.8	Bandklemme auf / zu
				19				
				20				
				21				
				22				
				23				
				24				
Bandführungsarme schließen	=SH==M01/2.8	=SH==M01-X16	PE	PE	=SH==M01+L10-X16	PE	=SH==M01/2.8	Bandführungsarme schließen

31

33

change	date	name	standa	VDE 0100	origin	replace for	replace through
			date	26.08.13			
			editor	Lo Grasso			
			check.	26.11.13			

Titan Umreifungstechnik
Berliner Straße 51-55
58332 Schwelm

TITAN

=SH==L01+P01-W61
VS11-H
Möllers

= SH==AUSW
T13079

+ P01

Sh. 32
44 Sh.

BI_A3N1D

interconnection diagram

cable name	=SH==L01+P01-W71	cable type	ÖLFLEX-FD 855P		
remark		no. of cores	36/PE	cross-section	1	cable length	–

function text	page/path	destinaton from	pin	core	destinaton to	pin	page/path	function text
VS11L Bandstopschalter B1	=SH==L01/7.1	=SH==L01-X15	1	1	=SH==L01+L10-X15	29	=SH==L01/7.1	VS11L Bandstopschalter B1
VS11L Bandstopschalter B1	=SH==L01/7.1	=SH==L01-X15	5	2	=SH==L01+L10-X15	30	=SH==L01/7.1	VS11L Bandstopschalter B1
VS11L Luftventil Mittelgang Y1	=SH==M01/5.1	=SH==M01-X16	38	3	=SH==M01+L10-X16	11	=SH==M01/5.1	VS11L Luftventil Mittelgang Y1
VS11L Bandstopschalter B1	=SH==L01/7.1	=SH==L01-X15	43	4	=SH==L01+L10-X15	65	=SH==L01/7.1	VS11L Bandstopschalter B1
VS11L Zählschalter B2	=SH==L01/7.2	=SH==L01-X15	44	5	=SH==L01+L10-X15	66	=SH==L01/7.2	VS11L Zählschalter B2
VS11L O-Position B3	=SH==L01/7.3	=SH==L01-X15	45	6	=SH==L01+L10-X15	67	=SH==L01/7.3	VS11L O-Position B3
VS11L Klemmposition B4	=SH==L01/7.4	=SH==L01-X15	46	7	=SH==L01+L10-X15	68	=SH==L01/7.4	VS11L Klemmposition B4
VS11L Sicherheitsschalter Klappe auf	=SH==L01/7.5	=SH==L01-X15	47	8	=SH==L01+L10-X15	69	=SH==L01/7.5	VS11L Sicherheitsschalter Klappe auf
VS11L Kopf vor Packstück B7	=SH==L01/7.6	=SH==L01-X15	48	9	=SH==L01+L10-X15	70	=SH==L01/7.6	VS11L Kopf vor Packstück B7
VS11L Kopf auf Packstück B8	=SH==L01/7.7	=SH==L01-X15	49	10	=SH==L01+L10-X15	71	=SH==L01/7.7	VS11L Kopf auf Packstück B8
VS11L Service-Schalter Band einlegen	=SH==L01/7.8	=SH==L01-X15	50	11	=SH==L01+L10-X15	72	=SH==L01/7.8	VS11L Service-Schalter Band einlegen
VS11L Service-Schalter Verschluß B10	=SH==L01/10.1	=SH==L01-X15	58	12	=SH==L01+L10-X15	73	=SH==L01/10.1	VS11L Service-Schalter Verschluß B10
VS11L Reserve	=SH==L01/10.2	=SH==L01-X15	59	13	=SH==L01+L10-X15	74	=SH==L01/10.2	VS11L Reserve
VS11L Reserve	=SH==L01/10.3	=SH==L01-X15	60	14	=SH==L01+L10-X15	75	=SH==L01/10.3	VS11L Reserve
				15				
				16				
VS11L Luftventil Mittelgang Y1	=SH==M01/5.1	=SH==M01-X16	20	17	=SH==M01+L10-X16	12	=SH==M01/5.1	VS11L Luftventil Mittelgang Y1
VS11L Luftventil Eilgang Y2	=SH==M01/5.2	=SH==M01-X16	21	18	=SH==M01+L10-X16	13	=SH==M01/5.2	VS11L Luftventil Eilgang Y2
VS11L Transportmotor vor Y3	=SH==M01/5.3	=SH==M01-X16	22	19	=SH==M01+L10-X16	14	=SH==M01/5.3	VS11L Transportmotor vor Y3
VS11L Transportmotor zurück Y4	=SH==M01/5.4	=SH==M01-X16	23	20	=SH==M01+L10-X16	15	=SH==M01/5.4	VS11L Transportmotor zurück Y4
VS11L Verschlußmotor Y5	=SH==M01/5.5	=SH==M01-X16	24	21	=SH==M01+L10-X16	16	=SH==M01/5.5	VS11L Verschlußmotor Y5
VS11L Spannmotor Y6	=SH==M01/5.6	=SH==M01-X16	25	22	=SH==M01+L10-X16	17	=SH==M01/5.6	VS11L Spannmotor Y6
VS11L Transportwippe Y7	=SH==M01/5.7	=SH==M01-X16	26	23	=SH==M01+L10-X16	18	=SH==M01/5.7	VS11L Transportwippe Y7
VS11L Richtvorrichtung Y8	=SH==M01/5.8	=SH==M01-X16	27	24	=SH==M01+L10-X16	19	=SH==M01/5.8	VS11L Richtvorrichtung Y8
VS11L Bandstophebel Y9	=SH==M01/6.1	=SH==M01-X16	28	25	=SH==M01+L10-X16	20	=SH==M01/6.1	VS11L Bandstophebel Y9
VS11L Spannwippe angedrückt Y16	=SH==M01/6.2	=SH==M01-X16	29	26	=SH==M01+L10-X16	21	=SH==M01/6.2	VS11L Spannwippe angedrückt Y16
VS11L Klappe auf Y17	=SH==M01/6.3	=SH==M01-X16	30	27	=SH==M01+L10-X16	22	=SH==M01/6.3	VS11L Klappe auf Y17
VS11L Klappe zu Y18	=SH==M01/6.4	=SH==M01-X16	31	28	=SH==M01+L10-X16	23	=SH==M01/6.4	VS11L Klappe zu Y18
				29				
VS11L Reserve	=SH==M01/6.6	=SH==M01-X16	36	30	=SH==M01+L10-X16	24	=SH==M01/6.6	VS11L Reserve
VS11L Zählschalter B2	=SH==L01/7.2	=SH==L01-X15	9	31	=SH==L01+L10-X15	31	=SH==L01/7.2	VS11L Zählschalter B2
VS11L Zählschalter B2	=SH==L01/7.2	=SH==L01-X15	10	32	=SH==L01+L10-X15	32	=SH==L01/7.2	VS11L Zählschalter B2
				33				
				34				
				35				
VS11L Reserve	=SH==M01/6.8	=SH==M01-X16	PE	PE	=SH==M01+L10-X16	PE	=SH==M01/2.8	Bandführungsarme schließen

change	date	name					
			date	26.08.13	Titan Umreifungstechnik	=SH==L01+P01-W71	= SH==AUSW	+ P01
			editor	Lo Grasso	Berliner Straße 51-55			
			check.	26.11.13	58332 Schwelm	VS11-H	T13079	Sh. 33
			standa	VDE 0100	origin / replace for / replace through	Möllers		44 Sh.

BI_A3N1D

interconnection diagram

cable name =SH==L01+P01-W76		cable type PUR	
remark		no. of cores 4	cross-section 0.34 / cable length –

function text	page/path	destinaton from	pin	core	destinaton to	pin	page/path	function text
Reserve	=SH==L01/6.8	=SH==L01+L18-X15	15	BN	=SH==L01+L18-B76	1	=SH==L01/7.6	VS11L Kopf vor Packstück B7
Reserve	=SH==L01/6.8	=SH==L01+L18-X15	30	BU	=SH==L01+L18-B76	3	=SH==L01/7.6	VS11L Kopf vor Packstück B7
				WH				
VS11L Kopf vor Packstück B7	=SH==L01/7.6	=SH==L01+L18-X15	47	BK	=SH==L01+L18-B76	4	=SH==L01/7.6	VS11L Kopf vor Packstück B7

33

35

change	date	name			
			date	26.08.13	Titan Umreifungstechnik
			editor	Lo Grasso	Berliner Straße 51-55
			check.	26.11.13	58332 Schwelm
			standa	VDE 0100	origin / replace for / replace through

TITANO

=SH==L01+P01-W76

VS11-H

Möllers

= SH==AUSW | + P01

T13079

Sh. 34

44 Sh.

BI_A3N1D

interconnection diagram

cable name	=SH==LO1+PO1-W77	cable type	PUR		
remark		no. of cores	4	cross-section	0.34	cable length	-

function text	page/path	destinaton from	pin	core	destinaton to	pin	page/path	function text
				BN				
				BU				
				WH				
VS11L Kopf auf Packstück B8	=SH==LO1/7.7	=SH==LO1+L18-X15	48	BK	=SH==LO1+L18-B77	4	=SH==LO1/7.7	VS11L Kopf auf Packstück B8

34

36

change	date	name	standa	date	editor	check.	origin	replace for	replace through
			VDE 0100	26.08.13	Lo Grasso	26.11.13			

Titan Umreifungstechnik
Berliner Straße 51-55
58332 Schwelm

TITAN

=SH==LO1+PO1-W77
VS11-H
Möllers

= SH==AUSW
+ PO1
T13079

Sh. 35
44 Sh.

BI_A3N1D

interconnection diagram

cable name	=SH==G10+P01-W12	cable type	ÖLFLEX		
remark		no. of cores	12/PE	cross-section	1.5

function text	page/path	destinaton from	pin	core	destinaton to	pin	page/path	function text
Maschine Einspeisung DC24V Not-Halt	=SH==G01/8.1	=SH==G01-X13	1	1	=SH==G10+L10-X13	1	=SH==G10+L10/1.1	
Maschine Einspeisung DC24V Not-Halt	=SH==G01/8.2	=SH==G01-X13	2	2	=SH==G10+L10-X13	3	=SH==G10+L10/1.2	Maschine Einspeisung DC24V Not-Halt
Maschine Einspeisung DC24V Schutztür	=SH==G01/8.3	=SH==G01-X13	3	3	=SH==G10+L10-X13	5	=SH==G10+L10/1.3	Maschine Einspeisung DC24V Schutztür
Maschine Einspeisung DC24V Schutztür	=SH==G01/8.4	=SH==G01-X13	4	4	=SH==G10+L10-X13	7	=SH==G10+L10/1.4	Maschine Einspeisung DC24V Schutztür
Maschine Einspeisung DC24V	=SH==G01/8.5	=SH==G01-X13	5	5	=SH==G10+L10-X13	9	=SH==G10+L10/1.5	Maschine Einspeisung DC24V
Maschine Einspeisung DC24V	=SH==G01/8.6	=SH==G01-X13	6	6	=SH==G10+L10-X13	13	=SH==G10+L10/1.6	Maschine Einspeisung DC24V
Maschine Einspeisung DC24V USV	=SH==G01/8.7	=SH==G01-X13	7	7	=SH==G10+L10-X13	17	=SH==G10+L10/1.7	Maschine Einspeisung DC24V USV
Maschine Einspeisung DC24V USV	=SH==G01/8.8	=SH==G01-X13	8	8	=SH==G10+L10-X13	18	=SH==G10+L10/1.8	Maschine Einspeisung DC24V USV
				9				
				10				
				11				
Maschine Einspeisung DC24V USV	=SH==G01/8.9	=SH==G01-X13	PE	PE	=SH==G10+L10-X13	PE	=SH==G10+L10/1.8	Maschine Einspeisung DC24V USV

change	date	name					
			standa	VDE 0100	origin	replace for	replace through
			check.	26.11.13			
			editor	Lo Grasso			
			date	26.08.13			

Titan Umreifungstechnik
Berliner Straße 51-55
58332 Schwelm

TITAN

=SH==G10+P01-W12

VS11-H

Möllers

= SH==AUSW

+ P01

T13079

Sh. 36
44 Sh.

BI_A3N1D

interconnection diagram

cable name	=SH==X01+P01-W11	cable type	ÖLFLEX		
remark		no. of cores	12/PE	cross-section	1.5

function text	page/path	destinaton from	pin	core	destinaton to	pin	page/path	function text
Not-Halt vom Kunden	=SH==X01/1.1	=SH==X01-X23	1	1	=SH==X01+LK23-X23	1		
Not-Halt vom Kunden	=SH==X01/1.1	=SH==X01-X23	2	2	=SH==X01+LK23-X23	2		
Not-Halt vom Kunden	=SH==X01/1.2	=SH==X01-X23	3	3	=SH==X01+LK23-X23	3		
Not-Halt vom Kunden	=SH==X01/1.2	=SH==X01-X23	4	4	=SH==X01+LK23-X23	4		
Not-Halt zum Kunden	=SH==X01/1.4	=SH==X01-X23	5	5	=SH==X01+LK23-X23	5		
Not-Halt zum Kunden	=SH==X01/1.4	=SH==X01-X23	6	6	=SH==X01+LK23-X23	6		
Not-Halt zum Kunden	=SH==X01/1.5	=SH==X01-X23	7	7	=SH==X01+LK23-X23	7		
Not-Halt zum Kunden	=SH==X01/1.5	=SH==X01-X23	8	8	=SH==X01+LK23-X23	8		
Not-Halt zum Kunden	=SH==X01/1.5	=SH==X01-X23	9	9	=SH==X01+LK23-X23	9		
Not-Halt zum Kunden	=SH==X01/1.5	=SH==X01-X23	10	10	=SH==X01+LK23-X23	10		
Reserve Adern	=SH==X01/1.6	=SH==X01-X23	11	11	=SH==X01+LK23-X23	11		
Reserve Adern	=SH==X01/1.6	=SH==X01-X23	PE	PE	=SH==X01+LK23-X23	PE		

			date	26.08.13	Titan Umreifungstechnik	TITAN	=SH==X01+P01-W11	= SH==AUSW	+ P01
			editor	Lo Grasso	Berliner Straße 51-55				
			check.	26.11.13	58332 Schwelm		VS11-H	T13079	Sh. 37
change	date	name	standa	VDE 0100	origin	replace for	replace through	Möllers		44 Sh.

interconnection diagram

BI_A3N1D

cable name =SH==X02+P01-W11		cable type ÖLFLEX	
remark		no. of cores 12/PE	cross-section 1.5	cable length –

function text	page/path	destinaton from	pin	core	destinaton to	pin	page/path	function text
Schutztür Kontakt Bauseits	=SH==X02/1.1	=SH==X02-X24	1	1	=SH==X02+LK24-X24	1		
Schutztür Kontakt Bauseits	=SH==X02/1.1	=SH==X02-X24	2	2	=SH==X02+LK24-X24	2		
Schutztür Kontakt Bauseits	=SH==X02/1.2	=SH==X02-X24	3	3	=SH==X02+LK24-X24	3		
Schutztür Kontakt Bauseits	=SH==X02/1.2	=SH==X02-X24	4	4	=SH==X02+LK24-X24	4		
Schutztür Kontakt zum Kunden	=SH==X02/1.4	=SH==X02-X24	5	5	=SH==X02+LK24-X24	5		
Schutztür Kontakt zum Kunden	=SH==X02/1.4	=SH==X02-X24	6	6	=SH==X02+LK24-X24	6		
Schutztür Kontakt zum Kunden	=SH==X02/1.5	=SH==X02-X24	7	7	=SH==X02+LK24-X24	7		
Schutztür Kontakt zum Kunden	=SH==X02/1.5	=SH==X02-X24	8	8	=SH==X02+LK24-X24	8		
Schutztür Kontakt zum Kunden	=SH==X02/1.5	=SH==X02-X24	9	9	=SH==X02+LK24-X24	9		
Schutztür Kontakt zum Kunden	=SH==X02/1.5	=SH==X02-X24	10	10	=SH==X02+LK24-X24	10		
Schutztür Kontakt zum Kunden	=SH==X02/1.6	=SH==X02-X24	11	11	=SH==X02+LK24-X24	11		
Schutztür Kontakt zum Kunden	=SH==X02/1.6	=SH==X02-X24	PE	PE	=SH==X02+LK24-X24	PE		

change	date	name	standa	VDE 0100	origin	replace for	replace through
			date	26.08.13			
			editor	Lo Grasso			
			check.	26.11.13			

Titan Umreifungstechnik
Berliner Straße 51-55
58332 Schwelm

TITAN

=SH==X02+P01-W11
VS11-H
Möllers

= SH==AUSW
+ P01
T13079

0 1 2 3 4 5 6 7 8 9

BI_A3N1D

interconnection diagram

cable name =SH==X03+P01-W11	cable type ÖLFLEX		
remark	no. of cores 12/PE	cross-section 1	cable length –

function text	page/path	destinaton from	pin	core	destinaton to	pin	page/path	function text
	=SH==X03/1.1	=SH==X03-X25	1	1	=SH==X03+LK25-X2	1		
Signalaustausch Kistentransport	=SH==X03/1.1	=SH==X03-X25	2	2	=SH==X03+LK25-X2	2		
Signalaustausch Kiste Position 1	=SH==X03/1.2	=SH==X03-X25	3	3	=SH==X03+LK25-X2	3		
Signalaustausch Kiste Position 2	=SH==X03/1.3	=SH==X03-X25	4	4	=SH==X03+LK25-X2	4		
Signalaustausch Start Umreifungsanlage	=SH==X03/1.4	=SH==X03-X25	5	5	=SH==X03+LK25-X2	5		
Signalaustausch Tür geöffnet	=SH==X03/1.5	=SH==X03-X25	6	6	=SH==X03+LK25-X2	6		
Signalaustausch Tür geschlossen	=SH==X03/1.6	=SH==X03-X25	7	7	=SH==X03+LK25-X2	7		
Signalaustausch Reserve	=SH==X03/1.7	=SH==X03-X25	8	8	=SH==X03+LK25-X2	8		
Signalaustausch Reserve	=SH==X03/1.8	=SH==X03-X25	9	9	=SH==X03+LK25-X2	9		
Signalaustausch Reserve	=SH==X03/1.9	=SH==X03-X25	10	10	=SH==X03+LK25-X2	10		
Signalaustausch Reserve	=SH==X03/1.9	=SH==X03-X25	11	11	=SH==X03+LK25-X2	11		
Signalaustausch Reserve	=SH==X03/1.9	=SH==X03-X25	PE	PE	=SH==X03+LK25-X2	PE		

			date	26.08.13	Titan Umreifungstechnik	TITAN	=SH==X03+P01-W11	= SH==AUSW	+ P01
			editor	Lo Grasso	Berliner Straße 51-55		VS11-H	T13079	Sh. 39
			check.	26.11.13	58332 Schwelm				44 Sh.
change	date	name	standa	VDE 0100	origin / replace for / replace through		Möllers		

BI_A3N1D

interconnection diagram

cable name	=SH==X03+P01-W20	cable type	ÖLFLEX		
remark		no. of cores	12/PE	cross-section 1	cable length –

function text	page/path	destinaton from	pin	core	destinaton to	pin	page/path	function text
	=SH==X03/2.0	=SH==X03-X26	1	1	=SH==X03+LK25-3X1	51		
Signalaustausch Umreifungsanlage	=SH==X03/2.1	=SH==X03-X26	2	2	=SH==X03+LK25-3X1	52		
Signalaustausch Umreifungsanlage	=SH==X03/2.2	=SH==X03-X26	3	3	=SH==X03+LK25-3X1	54		
Signalaustausch Umreifungsanlage	=SH==X03/2.3	=SH==X03-X26	4	4	=SH==X03+LK25-3X1	56		
Signalaustausch Umreifungsanlage	=SH==X03/2.4	=SH==X03-X26	5	5	=SH==X03+LK25-3X1	58		
Signalaustausch Umreifungsanlage	=SH==X03/2.5	=SH==X03-X26	6	6	=SH==X03+LK25-3X1	60		
Signalaustausch Umreifungsanlage	=SH==X03/2.6	=SH==X03-X26	7	7	=SH==X03+LK25-3X1	62		
Signalaustausch Umreifungsanlage	=SH==X03/2.7	=SH==X03-X26	8	8	=SH==X03+LK25-3X1	64		
Signalaustausch Umreifungsanlage	=SH==X03/2.8	=SH==X03-X26	9	9	=SH==X03+LK25-3X1	66		
				10				
				11				
Signalaustausch Umreifungsanlage	=SH==X03/2.8	=SH==X03-X26	PE	PE	=SH==X03+LK25-3X1	PE		

change	date	name					
			standa	VDE 0100	origin	replace for	replace through
			check.	26.11.13			
			editor	Lo Grasso			
			date	26.08.13			

Titan Umreifungstechnik
Berliner Straße 51-55
58332 Schwelm

TITANO

=SH==X03+P01-W20

VS11-H

Möllers

= SH==AUSW

+ P01

T13079

BI_A302D_PRO

parts list

pos.	designation	amount	designation		order number	function text
69	=SH==D01+P01-Q11	1	Haupt Not Ausschalter 3 polig	IU=25, P/AC-23A BEI	08211000171	Hauptschalter
70	=SH==D01+P01-Q15	1	Leistungsschalter, Bgr. S0	Einstellbereich 14...20A	08872000051	
71	=SH==D02+P01-Q12	1	Leistungsschalter Bgr. S00	Einstellbereich 0,9...1,25A	08872000049	Motorschutz Abroller 1
72	=SH==D02+P01-Q12	1	3-Phasen-Einspeiseklemme	ANSCHLUSS VON OBEN	08211000051	
73	=SH==D02+P01-Q12	1	3Phasen Sammelschiene	2 fach, Bgr. S00 und S0	08211000113	
74	=SH==D04+P01-A14	1	SINAMICS Power Module 240	3AC, 380-480V, 5,9A, 2,2kW	08699009059	
75	=SH==D04+P01-A14	1	SINAMICS Schirmanschlusssatz	für Powermodul Baugröße FSB	08699009067	
76	=SH==D04+P01-A21	1	SINAMICS SAFE BRAKE RELAY F. P	SINAMICS FUER POWER MODULE	08699009060	
77	=SH==D04+P01-A31	1	SINAMICS Control Unit	CU240E-2 DP-F Extended Safety	08699009077	
78	=SH==D04+P01-A31	1	SINAMICS MMC-PARAMETERSPEICHER	SIMATIC DP, ET200S	08140000190	
79	=SH==D04+P01-A38	1	SINAMICS G120 BOP 2	Basic Operator Panel 2	08699009078	
80	=SH==D04+P01-A51	1	Mechanisches Bauteil	siehe Mechanik-Stückliste		Absolutwertgeber Hubantrieb
81	=SH==D04+P01-K22	1	SCHUETZ, 3KW, 10E	400V, 3-polig, 24V DC	08871066151	Netzschütz Bremse FU Hubantrieb
82	=SH==D04+P01-K22	1	Entstoerdiode, DC12-250V	,BGRS00,UEBERSPGBEGR,F.CC	08871066160	Netzschütz Bremse FU Hubantrieb
83	=SH==D04+P01-M42	1	Mechanisches Bauteil	siehe Mechanik-Stückliste		Hubantrieb
84	=SH==D04+P01-Q11	1	Leistungsschalter Bgr. S00	Einstellbereich 7-10A	08872000039	Motorschutz FU Hubantrieb
85	=SH==D04+P01-Q11	1	3-Phasen-Einspeiseklemme	ANSCHLUSS VON OBEN	08211000051	
86	=SH==D04+P01-R16	1	SINAMICS Bremswiderstand	380-480V, 4kW, 160 R	08699009061	Bremswiderstand
87	=SH==D04+P01-V46	1	Mechanisches Bauteil	siehe Mechanik-Stückliste		Hubantrieb Bremsgleichrichter
88	=SH==D04+P01-X37	1	Simatic DP, Anschlußstecker	o. PG-Buchse, axial 180•	08140000135	Busanschlussstecker am FU Hubantrieb
89	=SH==D04+P01-Y47	1	Mechanisches Bauteil	siehe Mechanik-Stückliste		Hubantrieb Bremse
90	=SH==DOKU+P01	1	Standpult 1200x960x400	RAL 7035	08849904099	
91	=SH==DOKU+P01	1	Sockelelement 200 mm hoch	für TP6742 vorne und hinten	08849906016	
92	=SH==DOKU+P01	1	Sockelblende	für TP674 x seitlich, H=200mm	08849906009	
93	=SH==DOKU+P01	4	Bodenblech 100 mm tief	für TP6742	08849907027	
94	=SH==DOKU+P01	1	Profil f. Kabeleinf. hinten	für TP6742	08849907107	
95	=SH==DOKU+P01	1	Schiene für Innenausbau	für TP 1200 mm breit	08849906503	
96	=SH==DOKU+P01	2	Montagesteg	für 600 Tür	08849903857	
97	=SH==DOKU+P01	2	Blindverschluss rund	Zubehoer für 3SB3, 22,5 mm	08878017050	
98	=SH==F01+P01-E16	1	Kompaktleuchte	240V / 14W	08849903819	
99	=SH==F01+P01-F11	1	FI-Schutzschalter Typ A	30mA, 25A, 1P+N unverz.	08211000174	
100	=SH==F01+P01-F11	1	Hilfsstromschalter AS	für FI 5SM3, 1S + 1Ö	08805001012	
101	=SH==F01+P01-F15	1	Leitungsschutzschalter B10	B10A, 2pol.	08211000097	Schaltschranksteckdose nur für Programmiergerät verwen
102	=SH==F01+P01-F15	1	Hilfsstromschalter	1S+1Ö für LS Schalter	08211000148	Schaltschranksteckdose nur für Programmiergerät verwen
103	=SH==F01+P01-F18	1	Leitungsschutzschalter		08211000214	

			date	26.08.13	Titan Umreifungstechnik	TITAN	Stückliste	= SH==AUSW	+ P01
			editor	Lo Grasso	Berliner Straße 51-55				
			check.	26.11.13	58332 Schwelm		VS11-H	T13079	Sh. 41
change	date	name	standa	VDE 0100	origin	replace for / replace through	Möllers		44 Sh.

BI_A302D_PRO

parts list

pos.	designation	amount	designation		order number	function text
104	=SH==F01+P01-F18	1	Hilfsstromschalter	1S+1Ö für LS Schalter	08211000148	
105	=SH==F01+P01-M17	1	Wandanbau-Kühlgerät	230V AC / 500W Kühlleistung	08849905336	
106	=SH==F01+P01-M17	0	Türpositionsschalter	inkl. Einbauzubehöf	08849904069	
107	=SH==F01+P01-M17	1	Universalwinkel		08849903853	
108	=SH==F01+P01-Q11	1	Leistungsschalter Bgr. S00	Einstellbereich 4,5...6,3A	08872000033	Motorschutz Trafo 480V/230V
109	=SH==F01+P01-S16	1	Türpositionsschalter	m. 600 mm	08849903800	
110	=SH==F01+P01-S18	1	Türpositionsschalter	inkl. Einbauzubehöf	08849904069	
111	=SH==F01+P01-T11	1	Transformator	Pri.550-208V Sec: 2 x 115V	08700000097	2x115V 1600VA Steuertransformator
112	=SH==F01+P01-X15	1	Schaltschranksteckdose 230V/16	Hutschienenmontage TS35,grau	08810200020	Schaltschranksteckdose nur für Programmiergerät verwen
113	=SH==G01+P01-A22	1	Redundanzmodul	IN: 24V DC, 2 x 20A	08140000300	Redundanzmodul
114	=SH==G01+P01-F1.11	1	Sicherungsmodul-4-Kanal	24VDC OUT: 24V/4-6-8-10ADC	08770000125	Lastkreisüberwachung
115	=SH==G01+P01-F14	1	Leitungsschutzschalter C6	C6A, 2pol.	08211000180	Spannungsversorgung 24V DC Redundanznetzgerät 1
116	=SH==G01+P01-F14	1	Hilfsstromschalter	1S+1Ö für LS Schalter	08211000148	Spannungsversorgung 24V DC Redundanznetzgerät 1
117	=SH==G01+P01-F16	1	Leitungsschutzschalter C6	C6A, 2pol.	08211000180	
118	=SH==G01+P01-F16	1	Hilfsstromschalter	1S+1Ö für LS Schalter	08211000148	
119	=SH==G01+P01-F22	1	Sicherungsmodul-2-Kanal	24VDC OUT:24 V/4-6-8-10ADC	08770000127	Lastkreisüberwachung
120	=SH==G01+P01-G1.11	1	Gleichstromversorgung	SITOP PSU100M	08140000233	
121	=SH==G01+P01-G14	1	SITOP Laststromversorgung	Eingang: AC 120/230-500V	08140000115	
122	=SH==G01+P01-G16	1	SITOP Laststromversorgung	Eingang: AC 120/230-500V	08140000115	
123	=SH==G01+P01-X34	1	Potenzialverteiler 2x2 Espkl.	2x8 Verteilerklemmen 250 V	08140000521	
124	=SH==G01+P01-X44	1	Potenzialverteiler 2x2 Espkl.	2x8 Verteilerklemmen 250 V	08140000521	
125	=SH==G01+P01-X54	1	Potenzialverteiler 2x2 Espkl.	2x16 Verteilerklemmen 250 V	08140000523	
126	=SH==G01+P01-X64	1	Potenzialverteiler 2x2 Espkl.	2x12 Verteilerklemmen 250 V	08140000522	
127	=SH==G01+P01-X74	1	Potenzialverteiler 2x2 Espkl.	2x8 Verteilerklemmen 250 V	08140000521	
128	=SH==K01+P01-A12	1	Simatic S7-300 CPU315-2DP	Zentralbaugruppe	08140000136	
129	=SH==K01+P01-A12	1	Simatic S7,Micro Memory Card	CPU 3,3 V NFLASH, 128 KBYTE	08140000053	
130	=SH==K01+P01-A13	1	Kommunikationsprozessor	CP343-1 LEAN	08140000079	
131	=SH==K01+P01-A14	1	Kommunikationsprozessor	CP343-1 LEAN	08140000079	
132	=SH==K01+P01-A16	1	Simatic S7-300, Digitalbaugrup	Pot.Getr. 16DE und 16DA, DC	08140000078	
133	=SH==K01+P01-A16	1	Simatic S7-300, Frontst.40 pol	mit Schraubkontakten	08140000088	
134	=SH==K01+P01-A21	1	Simatic S7-300, Digitaleingabe	Pot.Getr. 32DE, DC24V	08140000076	
135	=SH==K01+P01-A21	1	Simatic S7-300, Frontst.40 pol	mit Schraubkontakten	08140000088	
136	=SH==K01+P01-A22	1	Simatic S7-300, Digitaleingabe	Pot.Getr. 32DE, DC24V	08140000076	
137	=SH==K01+P01-A22	1	Simatic S7-300, Frontst.40 pol	mit Schraubkontakten	08140000088	
138	=SH==K01+P01-A23	1	Simatic S7-300, Digitalausgabe	Pot.Getr. 32DA, DC24V, 0,5A	08140000077	

			date	26.08.13	Titan Umreifungstechnik	TITAN	Stückliste	= SH==AUSW	+ P01
			editor	Lo Grasso	Berliner Straße 51-55				
			check.	26.11.13	58332 Schwelm		VS11-H	T13079	Sh. 42
change	date	name	standa	VDE 0100	origin	replace for / replace through	Möllers		44 Sh.

parts list

pos.	designation	amount	designation		order number	function text
139	=SH==K01+P01-A23	1	Simatic S7-300, Frontst.40 pol	mit Schraubkontakten	08140000088	
140	=SH==K01+P01-A25	1	SIMATIC S7-300, Zählerbaugr.	500kHz 1 Kanal,	08140000220	
141	=SH==K01+P01-A25	1	Simatic S7-300, Frontst.20 pol	mit Schraubkontakten	08140000087	
142	=SH==K01+P01-A26	1	Simatic S7-300, Digitalbaugr.	POT.GETR. 8DE UND 8DA, DC 24V,	08140000084	
143	=SH==K01+P01-A26	1	Simatic S7-300, Frontst.20 pol	mit Schraubkontakten	08140000087	
144	=SH==K01+P01-A121	1	OP177B DP Blue Mode STN-Displa	Tasten MPI- Schnittstelle Druc	08140000066	
145	=SH==K01+P01-X12	1	Simatic DP, Anschlußstecker	90 Grad Kabelabgang mit	08140000055	Busanschlussstecker an der CPU
146	=SH==K01+P01-X121	1	Simatic DP, Anschlußstecker	o. PG-Buchse, axial 180•	08140000135	Busanschlussstecker am Touch Panel
147	=SH==L01+P01-S81	1	BETAETELEM RUND,DRTAST,GN,FL.D	Leuchtdrucktaster mit Halter	08875000040	Steuerung Ein
148	=SH==L01+P01-S81	1	Schaltelem. m. 1SCHLTGLD,1S,1P	,SCHRAUB,	08332300740	Steuerung Ein
149	=SH==L01+P01-S81	1	Schildhalter 27 x 18	VE= 25 Stck.	08840003297	Steuerung Ein
150	=SH==L01+P01-S81	1	LED Lampenfassung grün	Schraubanschluß	08332400029	Steuerung Ein
151	=SH==L01+P01-S82	1	Betätigungselement	Drucktaster, rt, flach	08875000061	Steuerung Aus
152	=SH==L01+P01-S82	1	Schaltelement m. 1SCHLTGLD,1OE	,SCHRAUB,	08332300741	Steuerung Aus
153	=SH==L01+P01-S82	1	Schildhalter 27 x 18	VE= 25 Stck.	08840003297	Steuerung Aus
154	=SH==L01+P01-S83	1	Betaetigungselement rund,Drtas	Leuchtdrucktaster mit Halter	08332300701	Handbetrieb
155	=SH==L01+P01-S83	1	Schaltelem. m. 1SCHLTGLD,1S,1P	,SCHRAUB,	08332300740	Handbetrieb
156	=SH==L01+P01-S83	1	Schildhalter 27 x 18	VE= 25 Stck.	08840003297	Handbetrieb
157	=SH==L01+P01-S83	1	LED Lampenfassung weiss	Schraubanschluß	08332400028	Handbetrieb
158	=SH==L01+P01-S84	1	BETAETELEM RUND,DRTAST,GN,FL.D	Leuchtdrucktaster mit Halter	08875000040	Automatik
159	=SH==L01+P01-S84	1	Schaltelem. m. 1SCHLTGLD,1S,1P	,SCHRAUB,	08332300740	Automatik
160	=SH==L01+P01-S84	1	Schildhalter 27 x 18	VE= 25 Stck.	08840003297	Automatik
161	=SH==L01+P01-S84	1	LED Lampenfassung grün	Schraubanschluß	08332400029	Automatik
162	=SH==L01+P01-S85	1	BETAETELEM RUND,DRTAST,GN,FL.D	Leuchtdrucktaster mit Halter	08875000040	Zyklus Start
163	=SH==L01+P01-S85	1	Schaltelem. m. 1SCHLTGLD,1S,1P	,SCHRAUB,	08332300740	Zyklus Start
164	=SH==L01+P01-S85	1	Schildhalter 27 x 18	VE= 25 Stck.	08840003297	Zyklus Start
165	=SH==L01+P01-S85	1	LED Lampenfassung grün	Schraubanschluß	08332400029	Zyklus Start
166	=SH==L01+P01-S86	1	Betätigungselement	Drucktaster, rt, flach	08875000061	Zyklus Stop
167	=SH==L01+P01-S86	1	Schaltelement m. 1SCHLTGLD,1OE	,SCHRAUB,	08332300741	Zyklus Stop
168	=SH==L01+P01-S86	1	Schildhalter 27 x 18	VE= 25 Stck.	08840003297	Zyklus Stop
169	=SH==L01+P01-S87	1	Betaetigungselement rund,Drtas	Leuchtdrucktaster mit Halter	08332300716	Störung Quittieren
170	=SH==L01+P01-S87	1	Schaltelem. m. 1SCHLTGLD,1S,1P	,SCHRAUB,	08332300740	Störung Quittieren
171	=SH==L01+P01-S87	1	Schildhalter 27 x 18	VE= 25 Stck.	08840003297	Störung Quittieren
172	=SH==L01+P01-S87	1	LED Lampenfassung rot	Schraubanschluß	08332400026	Störung Quittieren
173	=SH==L01+P01-S88	1	Betaetigungselement rund,Drtas	Leuchtdrucktaster mit Halter	08332300701	Grundstellungsfahrt

			date	26.08.13	Titan Umreifungstechnik	TITAN	Stückliste	= SH==AUSW	+ P01
			editor	Lo Grasso	Berliner Straße 51-55				
			check.	26.11.13	58332 Schwelm		VS11-H	T13079	Sh. 43
change	date	name	standa	VDE 0100	origin	replace for	replace through	Möllers	44 Sh.

parts list

BI_A302D_PRO

pos.	designation	amount	designation		order number	function text
174	=SH==LO1+PO1-S88	1	Schaltelem. m. 1SCHLTGLD,1S,1P	,SCHRAUB,	08332300740	Grundstellungsfahrt
175	=SH==LO1+PO1-S88	1	Schildhalter 27 x 18	VE= 25 Stck.	08840003297	Grundstellungsfahrt
176	=SH==LO1+PO1-S88	1	LED Lampenfassung weiss	Schraubanschluß	08332400028	Grundstellungsfahrt
177	=SH==LO1+PO1-S91	1	BETAETELEM RUND,ORTAST,YE,FL.D	Leuchtdrucktaster mit Halter	08875000050	Freigabe Transport
178	=SH==LO1+PO1-S91	1	Schaltelem. m. 1SCHLTGLD,1S,1P	,SCHRAUB,	08332300740	Freigabe Transport
179	=SH==LO1+PO1-S91	1	Schildhalter 27 x 18	VE= 25 Stck.	08840003297	Freigabe Transport
180	=SH==LO1+PO1-S91	1	LED Lampenfassung gelb	Schraubanschluß	08332400027	Freigabe Transport
181	=SH==MO1+PO1-A18	1	Impulszähler SK 07.1 - 24 V DC	1.132.101.03	08230245014	
182	=SH==MO1+PO1-K11	1	SCHUETZ, 3KW, 1OE	400V, 3-polig, 24V DC	08871066151	Netzschütz FU Hubantrieb
183	=SH==MO1+PO1-K11	1	Entstoerdiode, DC12-250V	,BGRS00,UEBERSPGBEGR,F.CC	08871066160	Netzschütz FU Hubantrieb
184	=SH==MO1+PO1-K16	1	Koppelrelais	m. EMR u. Schraubklemme	08260000005	Schutztür geöffnet
185	=SH==MO1+PO1-K31	1	SCHUETZ, 3KW, 1OE	400V, 3-polig, 24V DC	08871066151	Netzschütz Abroller
186	=SH==MO1+PO1-K31	1	Entstoerdiode, DC12-250V	,BGRS00,UEBERSPGBEGR,F.CC	08871066160	Netzschütz Abroller
187	=SH==MO1+PO1-K32	1	SCHUETZ, 3KW, 1OE	400V, 3-polig, 24V DC	08871066151	Netzschütz Abroller
188	=SH==MO1+PO1-K32	1	Entstoerdiode, DC12-250V	,BGRS00,UEBERSPGBEGR,F.CC	08871066160	Netzschütz Abroller
189	=SH==MO1+PO1-K81	1	Koppelrelais	m. EMR u. Schraubklemme	08260000005	Signalaustausch Umreifungsanlage Betriebsbereit
190	=SH==MO1+PO1-K82	1	Koppelrelais	m. EMR u. Schraubklemme	08260000005	Signalaustausch Umreifungsanlage Störung
191	=SH==MO1+PO1-K83	1	Koppelrelais	m. EMR u. Schraubklemme	08260000005	Signalaustausch Umreifungsanlage übernahmebereit
192	=SH==MO1+PO1-K84	1	Koppelrelais	m. EMR u. Schraubklemme	08260000005	Signalaustausch Umreifungsanlage übergabebereit
193	=SH==MO1+PO1-K85	1	Koppelrelais	m. EMR u. Schraubklemme	08260000005	Signalaustausch Umreifungsanlage Leermeldung Magazin
194	=SH==MO1+PO1-K86	1	Koppelrelais	m. EMR u. Schraubklemme	08260000005	Signalaustausch Umreifungsanlage Freigabe Tür öffnen
195	=SH==MO1+PO1-K87	1	Koppelrelais	m. EMR u. Schraubklemme	08260000005	Signalaustausch Umreifungsanlage Reserve
196	=SH==MO1+PO1-K88	1	Koppelrelais	m. EMR u. Schraubklemme	08260000005	Signalaustausch Umreifungsanlage Reserve
197	=SH==NO1+PO1-K32	1	Sicherheitsrelaisbaustein	Sicherheitsmodul 24V DC/3S+1Ö	08300003030	
198	=SH==NO1+PO1-K42	1	Erweiterungsbaustein 24V DC	4S+2Ö	08300003031	Not-Halt Erweiterungsgerät
199	=SH==NO1+PO1-S11	1	Pilzdrucktaster schwarz 40 mm	20mm, Rund, Verrastung	08332300812	Not-Halt im Steuerpult
200	=SH==NO1+PO1-S11	3	Schaltelement Safety	gelb, mit Überwachungskontakt	08332300773	Not-Halt im Steuerpult
201	=SH==NO1+PO1-S11	1	Zubehör für 3SB3 Schutzkragen	Zubehör schutzkragen	08332300732	Not-Halt im Steuerpult
202	=SH==NO1+PO1-S33	1	Betaetigungselement rund,Ortas	Leuchtdrucktaster mit Halter	08332300716	
203	=SH==NO1+PO1-S33	1	Schaltelem. m. 1SCHLTGLD,1S,1P	,SCHRAUB,	08332300740	
204	=SH==NO1+PO1-S33	1	Schildhalter 27 x 18	VE= 25 Stck.	08840003297	
205	=SH==NO1+PO1-S33	1	LED Lampenfassung rot	Schraubanschluß	08332400026	
206	=SH==NO2+PO1-K32	1	Sicherheitsrelaisbaustein	Sicherheitsmodul 24V DC/3S+1Ö	08300003030	
207	=SH==NO2+PO1-K42	1	Erweiterungsbaustein 24V DC	4S+2Ö	08300003031	

+L01/1

			date	26.08.13	Titan Umreifungstechnik	TITAN	Stückliste	= SH==AUSW	+ PO1
			editor	Lo Grasso	Berliner Straße 51-55				
			check.	26.11.13	58332 Schwelm		VS11-H	T13079	Sh. 44
change	date	name	standa	VDE 0100	origin	replace for	replace through	Möllers		44 Sh.

BI_A3R1D

terminal strip and connector overview

terminal strip and connector designation	text of the strip definition	terminals / connectors					graphic page of the terminal strip
		first	last	amount PE	amount N	totally amount	
=SH==DO2+LO1-X3		1	PE	1	0	4	=SH==AUSW+LO1/2
=SH==LO1+LO1-X15		1	PE	1	0	15	=SH==AUSW+LO1/3

			date	26.08.13	Titan Umreifungstechnik	TITAN	Klemmenleisten- und Steckerübersichtsplan	= SH==AUSW	+ LO1	
			editor	Lo Grasso	Berliner Straße 51-55					
			check.	26.11.13	58332 Schwelm		VS11-H	T13079		Sh. 1
change	date	name	standa	VDE 0100	origin	replace for / replace through	Möllers			10 Sh.

terminal diagram

BI_A3K2D

function text	=SH==D02+L01-W11 ÖLFLEX	cable name typ	terminal strip designation =SH==D02+L01-X3 target destination	connection	terminal number	jumper	connection name	target destination	connection	cable name typ	=SH==D02+L10-W11 ÖLFLEX	page/path
Antrieb Abroller	1		-M12	U	1	o		+L10-X3	1		1	=SH==D02+P01/1.2
.	2		-M12	V	2	o		+L10-X3	2		2	=SH==D02+P01/1.2
.	3		-M12	W	3	o		+L10-X3	3		3	=SH==D02+P01/1.2
.	PE		-M12	PE	PE	o	PE	+L10-X3	PE		PE	=SH==D02+P01/1.2

1

3

			date	26.08.13	Titan Umreifungstechnik	TITAN	=SH==D02+L01-X3	= SH==AUSW	+ L01
			editor	Lo Grasso	Berliner Straße 51-55				
			check.	26.11.13	58332 Schwelm		VS11-H	T13079	Sh. 2
change	date	name	standa	VDE 0100	origin / replace for / replace through		Möllers		10 Sh.

BI_A3K2D

terminal diagram

terminal strip designation

=SH==L01+L01-X15

function text	=SH==L01+L01-W46	=SH==L01+L01-W43	=SH==L01+L01-W42	=SH==L01+L01-W41	cable name	typ	target destination	connection	terminal number	jumper	connection name	target destination	connection	typ	cable name	=SH==D02+L10-W11	=SH==L01+L01-W46	page/path
	PUR	PUR	PUR	PUR												ÖLFLEX	PUR	
Bandspeicher voll				BN			-B41	1	1			+L10-X15	9			4		=SH==L01+P01/4.1
Bandspeicher leer			BN				-B42	1	2									=SH==L01+P01/4.2
Bandspeicher Bandende		BN					-B43	1	3									=SH==L01+P01/4.3
Bandspeicher füllen							-S44	13	4			-B46	1				BN	=SH==L01+P01/4.4
Bandspeicher voll				BU			-B41	3	5			+L10-X15	23			5		=SH==L01+P01/4.1
Bandspeicher leer			BU				-B42	3	6									=SH==L01+P01/4.2
Bandspeicher Bandende		BU					-B43	3	7									=SH==L01+P01/4.3
Bandspeicher füllen									8			-B46	3				BU	=SH==L01+P01/4.4
Bandspeicher voll				BK			-B41	4	9	o	E7.0	+L10-X15	41			6		=SH==L01+P01/4.1
Bandspeicher leer			BK				-B42	4	10	o	E8.5	+L10-X15	42			7		=SH==L01+P01/4.2
Bandspeicher Bandende		BK					-B43	4	11	o	E8.6	+L10-X15	43			8		=SH==L01+P01/4.3
Bandspeicher füllen							-S44	14	12	o	E8.7	+L10-X15	44			9		=SH==L01+P01/4.4
Bandspeicher Reserve									13	o	E7.3	+L10-X15	45			10		=SH==L01+P01/4.5
Bandspeicher Bandmangel	BK						-B46	4	14	o	E7.5	+L10-X15	46			11		=SH==L01+P01/4.6
-									PE	o								=SH==L01+P01/4.6

			date	26.08.13	Titan Umreifungstechnik	TITAN	=SH==L01+L01-X15	= SH==AUSW	+L01
			editor	Lo Grasso	Berliner Straße 51-55				
			check.	26.11.13	58332 Schwelm		VS11-H	T13079	Sh. 3
change	date	name	standa	VDE 0100	origin	replace for	replace through	Möllers		10 Sh.

0 1 2 3 4 5 6 7 8 9

BI_A3S2D

cable overview

cable name cable designation	source by	target to	cable type	total cores	used cores	cross-section mmř	m	remark	graphics - page
=SH==D02+L01-W11	=SH==D02-X3	=SH==D02-M12	ÖLFLEX	4/PE	4/PE	1.5	-		/5
=SH==L01+L01-W41	=SH==L01-X15	=SH==L01-B41	PUR	3	3	0.5	-		/6
=SH==L01+L01-W42	=SH==L01-X15	=SH==L01-B42	PUR	3	3	0.5	-		/7
=SH==L01+L01-W43	=SH==L01-X15	=SH==L01-B43	PUR	3	3	0.5	-		/8
=SH==L01+L01-W46	=SH==L01-X15	=SH==L01-B46	PUR	3	3	0.5	-		/9

			date	26.08.13	Titan Umreifungstechnik Berliner Straße 51-55 58332 Schwelm	TITAN	Kabelübersicht VS11-H	= SH==AUSW	+ L01
			editor	Lo Grasso					
			check.	26.11.13				T13079	Sh. 4
change	date	name	standa	VDE 0100	origin / replace for / replace through		Möllers		10 Sh.

BI_A3N1D

interconnection diagram

cable name	=SH==D02+L01-W11	cable type	ÖLFLEX		
remark		no. of cores	4/PE	cross-section	1.5

function text	page/path	destinaton from	pin	core	destinaton to	pin	page/path	function text
Antrieb Abroller	=SH==D02+P01/1.2	=SH==D02-X3	1	1	=SH==D02-M12	U	=SH==D02+P01/1.2	Antrieb Abroller
Antrieb Abroller	=SH==D02+P01/1.2	=SH==D02-X3	2	2	=SH==D02-M12	V	=SH==D02+P01/1.2	Antrieb Abroller
Antrieb Abroller	=SH==D02+P01/1.2	=SH==D02-X3	3	3	=SH==D02-M12	W	=SH==D02+P01/1.2	Antrieb Abroller
Antrieb Abroller	=SH==D02+P01/1.2	=SH==D02-X3	PE	PE	=SH==D02-M12	PE	=SH==D02+P01/1.2	Antrieb Abroller

change	date	name	standa	date	editor	check.	origin	replace for	replace through
			VDE 0100	26.08.13	Lo Grasso	26.11.13	Titan Umreifungstechnik Berliner Straße 51-55 58332 Schwelm		

TITAN

=SH==D02+L01-W11

VS11-H

Möllers

= SH==AUSW

+ L01

T13079

Sh. 5

10 Sh.

BI_A3N1D

interconnection diagram

cable name =SH==L01+L01-W41		cable type PUR	
remark		no. of cores 3	cross-section 0.5	cable length –

function text	page/path	destinaton from	pin	core	destinaton to	pin	page/path	function text
Bandspeicher voll	=SH==L01+P01/4.1	=SH==L01-X15	1	BN	=SH==L01-B41	1	=SH==L01+P01/4.1	Bandspeicher voll
Bandspeicher voll	=SH==L01+P01/4.1	=SH==L01-X15	5	BU	=SH==L01-B41	3	=SH==L01+P01/4.1	Bandspeicher voll
Bandspeicher voll	=SH==L01+P01/4.1	=SH==L01-X15	9	BK	=SH==L01-B41	4	=SH==L01+P01/4.1	Bandspeicher voll

5 7

change	date	name	standa	VDE 0100	origin	replace for	replace through
			date	26.08.13			
			editor	Lo Grasso			
			check.	26.11.13			

Titan Umreifungstechnik
Berliner Straße 51-55
58332 Schwelm

TITAN

=SH==L01+L01-W41
VS11-H
Möllers

= SH==AUSW
T13079

+ L01

Sh. 6
10 Sh.

BI_A3N1D

interconnection diagram

cable name	=SH==L01+L01-W42	cable type	PUR		
remark		no. of cores	3	cross-section	0.5

function text	page/path	destinaton from	pin	core	destinaton to	pin	page/path	function text
Bandspeicher leer	=SH==L01+P01/4.2	=SH==L01-X15	2	BN	=SH==L01-B42	1	=SH==L01+P01/4.2	Bandspeicher leer
Bandspeicher leer	=SH==L01+P01/4.2	=SH==L01-X15	6	BU	=SH==L01-B42	3	=SH==L01+P01/4.2	Bandspeicher leer
Bandspeicher leer	=SH==L01+P01/4.2	=SH==L01-X15	10	BK	=SH==L01-B42	4	=SH==L01+P01/4.2	Bandspeicher leer

change	date	name	standa	VDE 0100	origin	replace for	replace through

date	26.08.13	
editor	Lo Grasso	
check.	26.11.13	

Titan Umreifungstechnik
Berliner Straße 51-55
58332 Schwelm

TITAN

=SH==L01+L01-W42
VS11-H
Möllers

= SH==AUSW | +L01

T13079

Sh. 7
10 Sh.

0	1	2	3	4	5	6	7	8	9

BI_A3N1D

interconnection diagram

cable name =SH==L01+L01-W43	cable type PUR		
remark	no. of cores 3	cross-section 0.5	cable length -

function text	page/path	destinaton from	pin	core	destinaton to	pin	page/path	function text
Bandspeicher Bandende	=SH==L01+P01/4.3	=SH==L01-X15	3	BN	=SH==L01-B43	1	=SH==L01+P01/4.3	Bandspeicher Bandende
Bandspeicher Bandende	=SH==L01+P01/4.3	=SH==L01-X15	7	BU	=SH==L01-B43	3	=SH==L01+P01/4.3	Bandspeicher Bandende
Bandspeicher Bandende	=SH==L01+P01/4.3	=SH==L01-X15	11	BK	=SH==L01-B43	4	=SH==L01+P01/4.3	Bandspeicher Bandende

7

9

			date	26.08.13	Titan Umreifungstechnik	TITAN	=SH==L01+L01-W43	= SH==AUSW	+ L01
			editor	Lo Grasso	Berliner Straße 51-55				
			check.	26.11.13	58332 Schwelm		VS11-H	T13079	Sh. 8
change	date	name	standa	VDE 0100	origin / replace for / replace through		Möllers		10 Sh.

BI_A3N1D

interconnection diagram

cable name	=SH==L01+L01-W46	cable type	PUR		
remark		no. of cores	3	cross-section	0.5

function text	page/path	destinaton from	pin	core	destinaton to	pin	page/path	function text
Bandspeicher füllen	=SH==L01+P01/4.4	=SH==L01-X15	4	BN	=SH==L01-B46	1	=SH==L01+P01/4.6	Bandspeicher Bandmangel
Bandspeicher füllen	=SH==L01+P01/4.4	=SH==L01-X15	8	BU	=SH==L01-B46	3	=SH==L01+P01/4.6	Bandspeicher Bandmangel
Bandspeicher Bandmangel	=SH==L01+P01/4.6	=SH==L01-X15	14	BK	=SH==L01-B46	4	=SH==L01+P01/4.6	Bandspeicher Bandmangel

change	date	name						
			date	26.08.13	Titan Umreifungstechnik	TITAN	=SH==L01+L01-W46	= SH==AUSW	+ L01
			editor	Lo Grasso	Berliner Straße 51-55				
			check.	26.11.13	58332 Schwelm		VS11-H	T13079	Sh. 9
			standa	VDE 0100	origin	replace for	replace through	Möllers		10 Sh.

B1_A3DZD_PRO

parts list

pos.	designation	amount	designation		order number	function text
1	=SH==D02+L01-M12	1	Mechanisches Bauteil	siehe Mechanik-Stückliste		Antrieb Abroller
2	=SH==DOKU+L01	1				
3	=SH==L01+L01-B41	1	Bandspeicher für Stahlband	siehe Bandspeicher-Ersatzteilliste		Bandspeicher voll
4	=SH==L01+L01-B42	1	Bandspeicher für Stahlband	siehe Bandspeicher-Ersatzteilliste		Bandspeicher leer
5	=SH==L01+L01-B43	1	Bandspeicher für Stahlband	siehe Bandspeicher-Ersatzteilliste		Bandspeicher Bandende
6	=SH==L01+L01-B46	1	Bandspeicher für Stahlband	siehe Bandspeicher-Ersatzteilliste		Bandspeicher Bandmangel
7	=SH==L01+L01-S44	1	Betätigungselement	Drucktaster, sw, flach	08875000030	Bandspeicher füllen
8	=SH==L01+L01-S44	1	Schaltelem. m. 1SCHLTGLD,1S,1P	,SCHRAUB,	08332300740	Bandspeicher füllen
9	=SH==L01+L01-S44	1	Schildhalter 27 x 18	VE= 25 Stck.	08840003297	Bandspeicher füllen

+L10/1

			date	26.08.13	Titan Umreifungstechnik	TITAN	Stückliste	= SH==AUSW	+L01
			editor	Lo Grasso	Berliner Straße 51-55				
			check.	26.11.13	58332 Schwelm		VS11-H	T13079	Sh. 10
change	date	name	standa	VDE 0100	origin	replace for / replace through	Möllers		10 Sh.

terminal strip and connector overview

terminal strip and connector designation	text of the strip definition	terminals / connectors					graphic page of the terminal strip
		first	last	amount PE	amount N	totally amount	
=SH==D02+L10-X3		1	PE	1	0	4	=SH==AUSW+L10/2
=SH==L01+L10-X15		1	PE	6	0	86	=SH==AUSW+L10/3
=SH==M01+L10-X16		1	PE	2	0	29	=SH==AUSW+L10/6
=SH==G10+L10-X13		1	PE	2	0	20	=SH==AUSW+L10/7

change	date	name	standa		origin	replace for	replace through
			date	26.08.13			
			editor	Lo Grasso			
			check.	26.11.13			
			standa	VDE 0100			

Titan Umreifungstechnik
Berliner Straße 51-55
58332 Schwelm

TITAN

Klemmenleisten- und Steckerübersichtsplan

VS11-H

Möllers

= SH==AUSW | +L10

T13079

Sh. 1
21 Sh.

terminal diagram

BI_A3K2D

function text	=SH==D02+L10-W11 ÖLFLEX	cable name typ	terminal strip designation =SH==D02+L10-X3 target destination	connection	terminal number	jumper	connection name	target destination	connection	cable name typ	=SH==D02+P01-W11 ÖLFLEX	page/path
Antrieb Abroller	1		+L01-X3	1	1	o		+P01-X3	1		1	=SH==D02+P01/1.2
.	2		+L01-X3	2	2	o		+P01-X3	2		2	=SH==D02+P01/1.2
.	3		+L01-X3	3	3	o		+P01-X3	3		3	=SH==D02+P01/1.2
.	PE		+L01-X3	PE	PE	o	PE	+P01-X3	PE		PE	=SH==D02+P01/1.2

1

3

			date	26.08.13	Titan Umreifungstechnik	TITAN	=SH==D02+L10-X3	= SH==AUSW	+ L10
			editor	Lo Grasso	Berliner Straße 51-55		VS11-H	T13079	Sh. 2
			check.	26.11.13	58332 Schwelm				21 Sh.
change	date	name	standa	VDE 0100	origin / replace for / replace through		Möllers		

BI_A3KZD

terminal diagram

terminal strip designation

=SH==L01+L10-X15

function text	=SH==L01+L10-W71 ÖLFLEX-FD 855P	=SH==L01+L10-W51 IGUS-CF130	=SH==L01+L10-W48 ÖLFLEX	=SH==D02+L10-W11 ÖLFLEX	=SH==L01+P01-W35 ÖLFLEX	=SH==L01+L10-W34 PUR	=SH==L01+L10-W33 PUR	=SH==L01+L10-W31 ÖLFLEX	cable name typ	target destination	connection	terminal number	jumper	connection name	target destination	connection	cable name typ	=SH==L01+P01-W71 ÖLFLEX-FD 855P	page/path
Hubantrieb oben Grundstellung								1		-S31	13	1			=SH==G10-X13	9			=SH==L01+P01/3.1
-								3		-S31	21	2							=SH==L01+P01/3.2
Bolzen Hubantrieb							BN			-B33	1	3							=SH==L01+P01/3.3
Hubantrieb unten Stop						BN				-B34	1	4							=SH==L01+P01/3.4
VS11 Aggregat Druckschalter					1					-S35	1	5							=SH==L01+P01/3.5
-												6							=SH==L01+P01/3.6
Reserve												7							=SH==L01+P01/3.7
-												8			-X15	9			=SH==L01+P01/3.8
Bandspeicher voll				4						+L01-X15	1	9			-X15	8			=SH==L01+P01/4.1
Bandspeicher leer												10							=SH==L01+P01/4.2
Bandspeicher füllen												11							=SH==L01+P01/4.5
Bandspeicher Bandmangel												12							=SH==L01+P01/4.6
Druckschalter Hauptabsperrventil			1							-S48	1	13							=SH==L01+P01/4.8
Reflexions-Lichtschranke Einlauf		1								+L18-X15	1	14							=SH==L01+P01/5.1
Hubantrieb oben Grundstellung												15			=SH==G10-X13	13			=SH==L01+P01/3.1
-												16							=SH==L01+P01/3.2
Bolzen Hubantrieb							BU			-B33	3	17							=SH==L01+P01/3.3
Hubantrieb unten Stop						BU				-B34	3	18							=SH==L01+P01/3.4
VS11 Aggregat Druckschalter					2					-S35	4	19							=SH==L01+P01/3.5
Reserve												20							=SH==L01+P01/3.6
-												21							=SH==L01+P01/3.7
-												22			-X15	23			=SH==L01+P01/3.8
Bandspeicher voll				5						+L01-X15	5	23			-X15	22			=SH==L01+P01/4.1
Bandspeicher leer												24							=SH==L01+P01/4.2
Bandspeicher Reserve												25							=SH==L01+P01/4.5
Bandspeicher Bandmangel												26							=SH==L01+P01/4.6
Druckschalter Hauptabsperrventil			2							-S48	4	27							=SH==L01+P01/4.8
Reflexions-Lichtschranke Einlauf		2								+L18-X15	16	28							=SH==L01+P01/5.1
VS11L Bandstopschalter B1	1									+L19-XS1	A1	29	o		+P01-X15	1		1	=SH==L01+P01/7.1
-	2									+L19-XS1	A2	30	o		+P01-X15	5		2	=SH==L01+P01/7.1
VS11L Zählschalter B2	31									+L19-XS1	C2	31	o		+P01-X15	9		31	=SH==L01+P01/7.2
-	32									+L19-XS1	C3	32	o		+P01-X15	10		32	=SH==L01+P01/7.2

			date	26.08.13	Titan Umreifungstechnik	TITANO	=SH==L01+L10-X15	= SH==AUSW	+L10
			editor	Lo Grasso	Berliner Straße 51-55				
			check.	26.11.13	58332 Schwelm		VS11-H	T13079	Sh. 3
change	date	name	standa	VDE 0100	origin	replace for	replace through	Möllers		21 Sh.

BI_A3K2D

terminal diagram

terminal strip designation

=SH==L01+L10-X15

function text		=SH==L01+L10-W51	=SH==L01+L10-W48	=SH==D02+L10-W11	=SH==L01+P01-W35	=SH==L01+L10-W34	=SH==L01+L10-W33	=SH==L01+L10-W31	cable name	target destination	connection	terminal number	jumper	connection name	target destination	connection	cable name	=SH==L01+P01-W31	=SH==L01+P01-W61			page/path
		IGUS-CF130	ÖLFLEX	ÖLFLEX	ÖLFLEX	PUR	PUR	ÖLFLEX	typ								typ	ÖLFLEX	ÖLFLEX			
Hubantrieb oben Grundstellung								2		-S31	14	33	o	E6.0	+P01-X15	11		1				=SH==L01+P01/3.1
-								4		-S31	22	34	o	E6.1	+P01-X15	12		2				=SH==L01+P01/3.2
Bolzen Hubantrieb							WH			-B33	4	35	o	E6.2	+P01-X15	13		3				=SH==L01+P01/3.3
Hubantrieb unten Stop						WH				-B34	2	36	o	E6.3	+P01-X15	14		4				=SH==L01+P01/3.4
VS11 Aggregat Druckschalter					3					-S35	2	37	o	E6.4	+P01-X15	15		5				=SH==L01+P01/3.5
Reserve												38	o	E6.5	+P01-X15	16		6				=SH==L01+P01/3.6
-												39	o	E6.6	+P01-X15	17		7				=SH==L01+P01/3.7
-												40	o	E6.7	+P01-X15	18		8				=SH==L01+P01/3.8
Bandspeicher voll				6						+L01-X15	9	41	o	E7.0	+P01-X15	19		9				=SH==L01+P01/4.1
Bandspeicher leer				7						+L01-X15	10	42	o	E8.5	+P01-X15	20		10				=SH==L01+P01/4.2
Bandspeicher Bandende				8						+L01-X15	11	43	o	E8.6	+P01-X15	21		11				=SH==L01+P01/4.3
Bandspeicher füllen				9						+L01-X15	12	44	o	E8.7	+P01-X15	22		12				=SH==L01+P01/4.4
Bandspeicher Reserve				10						+L01-X15	13	45	o	E7.3	+P01-X15	23		13				=SH==L01+P01/4.5
Bandspeicher Bandmangel				11						+L01-X15	14	46	o	E7.5	+P01-X15	24		14				=SH==L01+P01/4.6
Reserve												47	o	E7.6	+P01-X15	25		15				=SH==L01+P01/4.7
Druckschalter Hauptabsperrventil			3							-S48	2	48	o	E7.7	+P01-X15	26		16				=SH==L01+P01/4.8
Reflexions-Lichtschranke Einlauf		3								+L18-X15	31	49	o	E8.0	+P01-X15	27		17				=SH==L01+P01/5.1
Reflexions-Lichtschranke Einlauf		4								+L18-X15	32	50	o	E8.1	+P01-X15	28		18				=SH==L01+P01/5.2
Kanalarmüberwachung am		5								+L18-X15	33	51	o	E8.2	+P01-X15	29		19				=SH==L01+P01/5.3
Kanalarmüberwachung am Ausleger		6								+L18-X15	34	52	o	E8.3	+P01-X15	30		20				=SH==L01+P01/5.4
Reflexions-Lichtschranke Auslauf		7								+L18-X15	35	53	o	E8.4	+P01-X15	31		21				=SH==L01+P01/5.5
Reflexions-Lichtschranke Auslauf		8								+L18-X15	36	54	o	E7.1	+P01-X15	32		22				=SH==L01+P01/5.6
Reserve		9								+L18-X15	37	55	o	E7.2	+P01-X15	33		23				=SH==L01+P01/5.7
-		10								+L18-X15	38	56	o	E7.4	+P01-X15	34		24				=SH==L01+P01/5.8
Bandfangarm 1 Grundstellung Einlauf		11								+L18-X15	39	57	o	E2.0	+P01-X15	35			1			=SH==L01+P01/6.1
Bandfangarm 1 zum Coil Einlauf		12								+L18-X15	40	58	o	E2.1	+P01-X15	36			2			=SH==L01+P01/6.2
Bandfangarm 2 Grundstellung Auslauf		13								+L18-X15	41	59	o	E2.2	+P01-X15	37			3			=SH==L01+P01/6.3
Bandfangarm 2 zum Coil Auslauf		14								+L18-X15	42	60	o	E2.3	+P01-X15	38			4			=SH==L01+P01/6.4
Umreifungsaggregat hinten		15								+L18-X15	43	61	o	E2.4	+P01-X15	39			5			=SH==L01+P01/6.5
-		16								+L18-X15	44	62	o	E2.5	+P01-X15	40			6			=SH==L01+P01/6.6
Umreifungsaggregat vorne		17								+L18-X15	45	63	o	E2.6	+P01-X15	41			7			=SH==L01+P01/6.7
Reserve		18								+L18-X15	46	64	o	E2.7	+P01-X15	42			8			=SH==L01+P01/6.8

			date	26.08.13	Titan Umreifungstechnik	TITAN	=SH==L01+L10-X15	= SH==AUSW	+L10
			editor	Lo Grasso	Berliner Straße 51-55				
			check.	26.11.13	58332 Schwelm		VS11-H	T13079	Sh. 4
change	date	name	standa	VDE 0100	origin	replace for	replace through	Möllers		21 Sh.

BI_A3K2D

terminal diagram

terminal strip designation

=SH==L01+L10-X15

function text	=SH==L01+L10-W48	=SH==L01+P01-W35	=SH==L01+P01-W61	=SH==L01+L10-W51	=SH==L01+L10-W71	cable name	target destination	connection	terminal number	jumper	connection name	target destination	connection	cable name	=SH==L01+P01-W71	=SH==L01+L10-W31	=SH==X03+L10-W51	=SH==L01+P01-W31	page/path
	ÖLFLEX	ÖLFLEX	ÖLFLEX	IGUS-CF130	ÖLFLEX-FD 855P	typ								typ	ÖLFLEX-FD 855P	ÖLFLEX	IGUS-CF130	ÖLFLEX	
VS11L Bandstopschalter B1					4		+L19-XS1	B1	65	o	E9.0	+P01-X15	43		4				=SH==L01+P01/7.1
VS11L Zählschalter B2					5		+L19-XS1	B2	66	o		+P01-X15	44		5				=SH==L01+P01/7.2
VS11L O-Position B3					6		+L19-XS1	B3	67	o	E9.2	+P01-X15	45		6				=SH==L01+P01/7.3
VS11L Klemmposition B4					7		+L19-XS1	B4	68	o	E9.3	+P01-X15	46		7				=SH==L01+P01/7.4
VS11L Sicherheitsschalter Klappe					8		+L19-XS1	C1	69	o	E9.4	+P01-X15	47		8				=SH==L01+P01/7.5
VS11L Kopf vor Packstück B7				19			+L18-X15	47	70	o	E9.5	+P01-X15	48		9				=SH==L01+P01/7.6
VS11L Kopf auf Packstück B8				20			+L18-X15	48	71	o	E9.6	+P01-X15	49		10				=SH==L01+P01/7.7
VS11L Service-Schalter Band					11		+L19-XS1	C4	72	o	E9.7	+P01-X15	50		11				=SH==L01+P01/7.8
VS11L Service-Schalter Verschluß					12		+L19-XS1	D1	73	o	E3.0	+P01-X15	58		12				=SH==L01+P01/10.1
VS11L Reserve					13		+L19-XS1	D2	74	o	E3.1	+P01-X15	59		13				=SH==L01+P01/10.2
-					14		+L19-XS1	D3	75	o	E3.2	+P01-X15	60		14				=SH==L01+P01/10.3
-									76	o									=SH==L01+P01/10.3
Grundstellung Maschine			15				+P01-X15	67	77	o		-S31	34			5			=SH==X03+P01/3.1
-									78	o		-S31	33			6			=SH==X03+P01/3.2
-									79	o		+L18-X15	49				21		=SH==X03+P01/3.3
-			16				+P01-X15	68	80	o		+L18-X15	50				22		=SH==X03+P01/3.4
VS11 Aggregat Druckschalter		PE					-S35	PE	PE	o									=SH==L01+P01/3.5
Druckschalter Hauptabsperrventil	PE						-S48	PE	PE	o		+P01-X15	PE					PE	=SH==L01+P01/4.8
-									PE	o									=SH==L01+P01/4.8
Reserve				PE			+L18-X15	PE	PE	o									=SH==L01+P01/6.8
Grundstellung Maschine									PE	o	.	.				PE			=SH==X03+P01/3.2
-									PE	o									=SH==X03+P01/3.3

			date	26.08.13	Titan Umreifungstechnik	TITAN	=SH==L01+L10-X15	= SH==AUSW	+L10
			editor	Lo Grasso	Berliner Straße 51-55				
			check.	26.11.13	58332 Schwelm		VS11-H	T13079	Sh. 5
change	date	name	standa	VDE 0100	origin	replace for	replace through	Möllers		21 Sh.

terminal diagram

BI_A3K2D

function text	=SH==M01+L10-W37 ÖLFLEX	=SH==L01+L10-W71 ÖLFLEX-FD 855P	=SH==M01+L10-W25 IGUS-CF130	=SH==M01+L10-W24 ÖLFLEX	cable name typ	target destination	connection	terminal number	jumper	connection name	target destination	connection	cable name typ	=SH==L01+P01-W61 ÖLFLEX	=SH==L01+P01-W71 ÖLFLEX-FD 855P	page/path
						terminal strip designation =SH==M01+L10-X16										
Druckluft Hauptabsperrventil				2		-Y24	A2	1	●		+P01-X16	37		14		=SH==M01+P01/2.4
Horizontaler Fahrschlitten			2			+L18-X16	1	2	●							=SH==M01+P01/2.5
Horizontaler Fahrschlitten vorne								3	●							=SH==M01+P01/2.6
Bandführungsarme öffnen								4	●							=SH==M01+P01/2.7
Druckluft Hauptabsperrventil				1		-Y24	A1	5	○	A13.0	+P01-X16	9		9		=SH==M01+P01/2.4
Horizontaler Fahrschlitten			1			+L18-X16	6	6	○	A13.1	+P01-X16	10		10		=SH==M01+P01/2.5
Horizontaler Fahrschlitten vorne			3			+L18-X16	7	7	○	A13.2	+P01-X16	11		11		=SH==M01+P01/2.6
Bandführungsarme öffnen			4			+L18-X16	8	8	○	A13.3	+P01-X16	12		12		=SH==M01+P01/2.7
Bandführungsarme schließen			5			+L18-X16	9	9	○	A13.4	+P01-X16	13		13		=SH==M01+P01/2.8
-								10	○							=SH==M01+P01/2.8
VS11L Luftventil Mittelgang Y1		3				+L19-XS1	A3	11	○		+P01-X16	38			3	=SH==M01+P01/5.1
-		17				+L19-XS1	E1	12	○	A2.0	+P01-X16	20			17	=SH==M01+P01/5.1
VS11L Luftventil Eilgang Y2		18				+L19-XS1	E2	13	○	A2.1	+P01-X16	21			18	=SH==M01+P01/5.2
VS11L Transportmotor vor Y3		19				+L19-XS1	E3	14	○	A2.2	+P01-X16	22			19	=SH==M01+P01/5.3
VS11L Transportmotor zurück Y4		20				+L19-XS1	E4	15	○	A2.3	+P01-X16	23			20	=SH==M01+P01/5.4
VS11L Verschlußmotor Y5		21				+L19-XS1	F1	16	○	A2.4	+P01-X16	24			21	=SH==M01+P01/5.5
VS11L Spannmotor Y6		22				+L19-XS1	F2	17	○	A2.5	+P01-X16	25			22	=SH==M01+P01/5.6
VS11L Transportwippe Y7		23				+L19-XS1	F3	18	○	A2.6	+P01-X16	26			23	=SH==M01+P01/5.7
VS11L Richtvorrichtung Y8		24				+L19-XS1	F4	19	○	A2.7	+P01-X16	27			24	=SH==M01+P01/5.8
VS11L Bandstophebel Y9		25				+L19-XS1	G1	20	○	A3.0	+P01-X16	28			25	=SH==M01+P01/6.1
VS11L Spannwippe angedrückt Y16		26				+L19-XS1	G2	21	○	A3.1	+P01-X16	29			26	=SH==M01+P01/6.2
VS11L Klappe auf Y17		27				+L19-XS1	G3	22	○	A3.2	+P01-X16	30			27	=SH==M01+P01/6.3
VS11L Klappe zu Y18		28				+L19-XS1	G4	23	○	A3.3	+P01-X16	31			28	=SH==M01+P01/6.4
VS11L Reserve		30				+L19-XS1	A4	24	○		+P01-X16	36			30	=SH==M01+P01/6.6
VS11 Umreifungsaggregat	1					-Y37	A1	25	○	A14.6	+P01-X16	18		17		=SH==M01+P01/3.7
-	2					-Y37	A2	26	○		=SH==G10-X13	3				=SH==M01+P01/3.7
Bandklemme auf / zu			6			+L18-X16	10	27	○	A14.7	+P01-X16	19		18		=SH==M01+P01/3.8
Bandführungsarme schließen			PE			+L18-X16	PE	PE	○	PE	+P01-X16	PE		PE		=SH==M01+P01/2.8
VS11L Reserve		PE				+L19-XS1	D4	PE	○		+P01-X16	PE			PE	=SH==M01+P01/6.8

5

7

			date	26.08.13	Titan Umreifungstechnik	TITAN	=SH==M01+L10-X16	= SH==AUSW	+L10
			editor	Lo Grasso	Berliner Straße 51-55				
			check.	26.11.13	58332 Schwelm		VS11-H	T13079	Sh. 6
change	date	name	standa	VDE 0100	origin	replace for / replace through	Möllers		21 Sh.

BI_A3K2D

terminal diagram

terminal strip designation

=SH==G10+L10-X13

function text	=SH==D04+L10-W51 cable name	LIYCY	typ	target destination	connection	terminal number	jumper	connection name	target destination	connection	cable name typ	=SH==G10+P01-W12 ÖLFLEX	page/path
						1			=SH==G01+P01-X13	1		1	=SH==G10/1.1
						2							=SH==G10/1.1
Maschine Einspeisung DC24V Not-Halt				=SH==M01-X16	26	3			=SH==G01+P01-X13	2		2	=SH==G10/1.2
-						4							=SH==G10/1.2
Maschine Einspeisung DC24V						5			=SH==G01+P01-X13	3		3	=SH==G10/1.3
-						6							=SH==G10/1.3
-						7			=SH==G01+P01-X13	4		4	=SH==G10/1.4
-						8							=SH==G10/1.4
Maschine Einspeisung DC24V				=SH==L01-X15	1	9			=SH==G01+P01-X13	5		5	=SH==G10/1.5
-						10							=SH==G10/1.5
-						11							=SH==G10/1.5
-						12							=SH==G10/1.6
-				=SH==L01-X15	15	13			=SH==G01+P01-X13	6		6	=SH==G10/1.6
-						14							=SH==G10/1.6
-						15							=SH==G10/1.6
-						16							=SH==G10/1.7
Maschine Einspeisung DC24V USV		WH		=SH==D04+P01-A51-X4	1	17	o		=SH==G01+P01-X13	7		7	=SH==G10/1.7
-		BN		=SH==D04+P01-A51-X4	2	18	o		=SH==G01+P01-X13	8		8	=SH==G10/1.8
-						PE	o		=SH==G01+P01-X13	PE		PE	=SH==G10/1.8
-						PE	o						=SH==G10/1.8

		date	26.08.13	Titan Umreifungstechnik	TITAN	=SH==G10+L10-X13	= SH==AUSW	+L10
		editor	Lo Grasso	Berliner Straße 51-55				
		check.	26.11.13	58332 Schwelm		VS11-H	T13079	Sh. 7
change	date	name	standa	VDE 0100	origin	replace for	replace through	Möllers		21 Sh.

BI_A3S2D

cable overview

cable name / cable designation	source / by	target / to	cable type	total / cores	used / cores	cross-section / mmř	m	remark	graphics - / page
=SH==D02+L10-W11			ÖLFLEX	12/PE	12/PE	1.5	-		/9
	=SH==D02+L01-X3	=SH==D02-X3		12/PE	4/PE	1.5			/9
	=SH==L01+L01-X15	=SH==L01-X15		12/PE	8	1.5			/9
=SH==D04+L10-W51	=SH==G10-X13	=SH==D04+P01-A51-X4	LIYCY	2+SH	2	0.5	-		/10
=SH==L01+L10-W31			ÖLFLEX	7/PE	7/PE	1.5	-		/11
	=SH==L01-X15	=SH==L01-S31		7/PE	6	1.5			/11
	=SH==L01-X15	.		7/PE	1/PE	1.5			/11
=SH==L01+L10-W33	=SH==L01-X15	=SH==L01-B33	PUR	4	3	0.34	-		/12
=SH==L01+L10-W34	=SH==L01-X15	=SH==L01-B34	PUR	4	3	0.34	-		/13
=SH==L01+L10-W48	=SH==L01-X15	=SH==L01-S48	ÖLFLEX	4/PE	4/PE	0.5	-		/14
=SH==L01+L10-W51	=SH==L01-X15	=SH==L01+L18-X15	IGUS-CF130	25/PE	21/PE	1.5	-		/15
=SH==L01+L10-W71			ÖLFLEX-FD 855P	36/PE	28/PE	1	-		/16
	=SH==L01-X15	=SH==L01+L19-XS1		36/PE	13	1			/16
	=SH==M01-X16	=SH==M01+L19-XS1		36/PE	15/PE	1			/16
=SH==M01+L10-W24	=SH==M01-X16	=SH==M01-Y24	ÖLFLEX	3/PE	2	0.75	-		/17
=SH==M01+L10-W25	=SH==M01-X16	=SH==M01+L18-X16	IGUS-CF130	7/PE	7/PE	1.5	-		/18
=SH==M01+L10-W37	=SH==M01-X16	=SH==M01-Y37	ÖLFLEX	3/PE	2	0.75	-		/19
=SH==X03+L10-W51	=SH==L01-X15	=SH==L01+L18-X15	IGUS-CF130	25/PE	2	1.5	-		/20

			date	26.08.13	Titan Umreifungstechnik Berliner Straße 51-55 58332 Schwelm	TITAN	Kabelübersicht VS11-H	= SH==AUSW	+ L10
			editor	Lo Grasso					
			check.	26.11.13				T13079	Sh. 8
change	date	name	standa	VDE 0100	origin / replace for / replace through		Möllers		21 Sh.

BI_A3N1D

interconnection diagram

cable name	=SH==D02+L10-W11	cable type	ÖLFLEX		
remark		no. of cores	12/PE	cross-section	1.5

function text	page/path	destinaton from	pin	core	destinaton to	pin	page/path	function text
Antrieb Abroller	=SH==D02+P01/1.2	=SH==D02+L01-X3	1	1	=SH==D02-X3	1	=SH==D02+P01/1.2	Antrieb Abroller
Antrieb Abroller	=SH==D02+P01/1.2	=SH==D02+L01-X3	2	2	=SH==D02-X3	2	=SH==D02+P01/1.2	Antrieb Abroller
Antrieb Abroller	=SH==D02+P01/1.2	=SH==D02+L01-X3	3	3	=SH==D02-X3	3	=SH==D02+P01/1.2	Antrieb Abroller
Bandspeicher voll	=SH==L01+P01/4.1	=SH==L01+L01-X15	1	4	=SH==L01-X15	9	=SH==L01+P01/4.1	Bandspeicher voll
Bandspeicher voll	=SH==L01+P01/4.1	=SH==L01+L01-X15	5	5	=SH==L01-X15	23	=SH==L01+P01/4.1	Bandspeicher voll
Bandspeicher voll	=SH==L01+P01/4.1	=SH==L01+L01-X15	9	6	=SH==L01-X15	41	=SH==L01+P01/4.1	Bandspeicher voll
Bandspeicher leer	=SH==L01+P01/4.2	=SH==L01+L01-X15	10	7	=SH==L01-X15	42	=SH==L01+P01/4.2	Bandspeicher leer
Bandspeicher Bandende	=SH==L01+P01/4.3	=SH==L01+L01-X15	11	8	=SH==L01-X15	43	=SH==L01+P01/4.3	Bandspeicher Bandende
Bandspeicher füllen	=SH==L01+P01/4.4	=SH==L01+L01-X15	12	9	=SH==L01-X15	44	=SH==L01+P01/4.4	Bandspeicher füllen
Bandspeicher Reserve	=SH==L01+P01/4.5	=SH==L01+L01-X15	13	10	=SH==L01-X15	45	=SH==L01+P01/4.5	Bandspeicher Reserve
Bandspeicher Bandmangel	=SH==L01+P01/4.6	=SH==L01+L01-X15	14	11	=SH==L01-X15	46	=SH==L01+P01/4.6	Bandspeicher Bandmangel
Antrieb Abroller	=SH==D02+P01/1.2	=SH==D02+L01-X3	PE	PE	=SH==D02-X3	PE	=SH==D02+P01/1.2	Antrieb Abroller

			date	26.08.13	Titan Umreifungstechnik	TITAN	=SH==D02+L10-W11	= SH==AUSW	+L10	
			editor	Lo Grasso	Berliner Straße 51-55					
			check.	26.11.13	58332 Schwelm		VS11-H	T13079		Sh. 9
hange	date	name	standa	VDE 0100	origin	replace for	replace through	Möllers		21 Sh.

BI_A3N1D

interconnection diagram

cable name =SH==D04+L10-W51		cable type LIYCY	
remark		no. of cores 2+SH	cross-section 0.5	cable length –

function text	page/path	destinaton from	pin	core	destinaton to	pin	page/path	function text
Maschine Einspeisung DC24V USV	=SH==G10/1.7	=SH==G10-X13	17	WH	=SH==D04+P01-A51-X4	1		
Maschine Einspeisung DC24V USV	=SH==G10/1.8	=SH==G10-X13	18	BN	=SH==D04+P01-A51-X4	2		
				SH				

			date	26.08.13	Titan Umreifungstechnik	TITAN	=SH==D04+L10-W51	= SH==AUSW	+L10
			editor	Lo Grasso	Berliner Straße 51-55				
			check.	26.11.13	58332 Schwelm		VS11-H	T13079	Sh. 10
change	date	name	standa	VDE 0100	origin	replace for	replace through	Möllers		21 Sh.

BI_A3N1D

interconnection diagram

cable name =SH==L01+L10-W31		cable type ÖLFLEX	
remark		no. of cores 7/PE	cross-section 1.5	cable length –

function text	page/path	destinaton from	pin	core	destinaton to	pin	page/path	function text
Hubantrieb oben Grundstellung	=SH==L01+P01/3.1	=SH==L01-X15	1	1	=SH==L01-S31	13	=SH==L01+P01/3.1	Hubantrieb oben Grundstellung
Hubantrieb oben Grundstellung	=SH==L01+P01/3.1	=SH==L01-X15	33	2	=SH==L01-S31	14	=SH==L01+P01/3.1	Hubantrieb oben Grundstellung
Hubantrieb oben Grundstellung	=SH==L01+P01/3.2	=SH==L01-X15	2	3	=SH==L01-S31	21	=SH==L01+P01/3.1	Hubantrieb oben Grundstellung
Hubantrieb oben Grundstellung	=SH==L01+P01/3.2	=SH==L01-X15	34	4	=SH==L01-S31	22	=SH==L01+P01/3.1	Hubantrieb oben Grundstellung
Grundstellung Maschine	=SH==X03+P01/3.1	=SH==L01-X15	77	5	=SH==L01-S31	34	=SH==L01+P01/3.1	Hubantrieb oben Grundstellung
Grundstellung Maschine	=SH==X03+P01/3.2	=SH==L01-X15	78	6	=SH==L01-S31	33	=SH==L01+P01/3.1	Hubantrieb oben Grundstellung
Grundstellung Maschine	=SH==X03+P01/3.2	=SH==L01-X15	PE	PE				

			date	26.08.13	Titan Umreifungstechnik	TITAN	=SH==L01+L10-W31	= SH==AUSW	+L10
			editor	Lo Grasso	Berliner Straße 51-55				
			check.	26.11.13	58332 Schwelm		VS11-H	T13079	Sh. 11
change	date	name	standa	VDE 0100	origin	replace for	replace through	Möllers		21 Sh.

BI_A3N1D

interconnection diagram

cable name =SH==L01+L10-W33		cable type PUR	
remark		no. of cores 4	cross-section 0.34	cable length –

function text	page/path	destinaton from	pin	core	destinaton to	pin	page/path	function text
Bolzen Hubantrieb	=SH==L01+P01/3.3	=SH==L01-X15	3	BN	=SH==L01-B33	1	=SH==L01+P01/3.3	Bolzen Hubantrieb
Bolzen Hubantrieb	=SH==L01+P01/3.3	=SH==L01-X15	17	BU	=SH==L01-B33	3	=SH==L01+P01/3.3	Bolzen Hubantrieb
Bolzen Hubantrieb	=SH==L01+P01/3.3	=SH==L01-X15	35	WH	=SH==L01-B33	4	=SH==L01+P01/3.3	Bolzen Hubantrieb
				BK				

			date	26.08.13	Titan Umreifungstechnik	TITAN	=SH==L01+L10-W33	= SH==AUSW	+L10
			editor	Lo Grasso	Berliner Straße 51-55				
			check.	26.11.13	58332 Schwelm		VS11-H	T13079	Sh. 12
change	date	name	standa	VDE 0100	origin	replace for	replace through	Möllers		21 Sh.

0 1 2 3 4 5 6 7 8 9

BI_A3N1D

interconnection diagram

cable name =SH==L01+L10-W34	cable type PUR		
remark	no. of cores 4	cross-section 0.34	cable length –

function text	page/path	destinaton from	pin	core	destinaton to	pin	page/path	function text
Hubantrieb unten Stop	=SH==L01+P01/3.4	=SH==L01-X15	4	BN	=SH==L01-B34	1	=SH==L01+P01/3.4	Hubantrieb unten Stop
Hubantrieb unten Stop	=SH==L01+P01/3.4	=SH==L01-X15	18	BU	=SH==L01-B34	3	=SH==L01+P01/3.4	Hubantrieb unten Stop
Hubantrieb unten Stop	=SH==L01+P01/3.4	=SH==L01-X15	36	WH	=SH==L01-B34	2	=SH==L01+P01/3.4	Hubantrieb unten Stop
				BK				

			date	26.08.13	Titan Umreifungstechnik	TITAN	=SH==L01+L10-W34	= SH==AUSW	+ L10
			editor	Lo Grasso	Berliner Straße 51-55				
			check.	26.11.13	58332 Schwelm		VS11-H	T13079	Sh. 13
change	date	name	standa	VDE 0100	origin / replace for / replace through		Möllers		21 Sh.

0	1	2	3	4	5	6	7	8	9

BI_A3N1D

interconnection diagram

cable name =SH==L01+L10-W48	cable type ÖLFLEX		
remark	no. of cores 4/PE	cross-section 0.5	cable length -

function text	page/path	destinaton from	pin	core	destinaton to	pin	page/path	function text
Druckschalter Hauptabsperrventil	=SH==L01+P01/4.8	=SH==L01-X15	13	1	=SH==L01-S48	1	=SH==L01+P01/4.8	Reserve
Druckschalter Hauptabsperrventil	=SH==L01+P01/4.8	=SH==L01-X15	27	2	=SH==L01-S48	4	=SH==L01+P01/4.8	Reserve
Druckschalter Hauptabsperrventil	=SH==L01+P01/4.8	=SH==L01-X15	48	3	=SH==L01-S48	2	=SH==L01+P01/4.8	Reserve
Druckschalter Hauptabsperrventil	=SH==L01+P01/4.8	=SH==L01-X15	PE	PE	=SH==L01-S48	PE	=SH==L01+P01/4.8	Reserve

13

15

			date	26.08.13	Titan Umreifungstechnik	TITAN	=SH==L01+L10-W48	= SH==AUSW	+L10
			editor	Lo Grasso	Berliner Straße 51-55				
			check.	26.11.13	58332 Schwelm		VS11-H	T13079	Sh. 14
change	date	name	standa	VDE 0100	origin / replace for / replace through		Möllers		21 Sh.

BI_A3N1D

interconnection diagram

cable name	=SH==L01+L10-W51	cable type	IGUS-CF130		
remark		no. of cores	25/PE	cross-section	1.5

function text	page/path	destinaton from	pin	core	destinaton to	pin	page/path	function text
Reflexions-Lichtschranke Einlauf	=SH==L01+P01/5.1	=SH==L01-X15	14	1	=SH==L01+L18-X15	1	=SH==L01+P01/5.1	Reflexions-Lichtschranke Einlauf
Reflexions-Lichtschranke Einlauf	=SH==L01+P01/5.1	=SH==L01-X15	28	2	=SH==L01+L18-X15	16	=SH==L01+P01/5.1	Reflexions-Lichtschranke Einlauf
Reflexions-Lichtschranke Einlauf	=SH==L01+P01/5.1	=SH==L01-X15	49	3	=SH==L01+L18-X15	31	=SH==L01+P01/5.1	Reflexions-Lichtschranke Einlauf
Reflexions-Lichtschranke Einlauf innen	=SH==L01+P01/5.2	=SH==L01-X15	50	4	=SH==L01+L18-X15	32	=SH==L01+P01/5.2	Reflexions-Lichtschranke Einlauf innen
Kanalarmüberwachung am	=SH==L01+P01/5.3	=SH==L01-X15	51	5	=SH==L01+L18-X15	33	=SH==L01+P01/5.3	Kanalarmüberwachung am
Kanalarmüberwachung am Ausleger	=SH==L01+P01/5.4	=SH==L01-X15	52	6	=SH==L01+L18-X15	34	=SH==L01+P01/5.4	Kanalarmüberwachung am Ausleger
Reflexions-Lichtschranke Auslauf innen	=SH==L01+P01/5.5	=SH==L01-X15	53	7	=SH==L01+L18-X15	35	=SH==L01+P01/5.5	Reflexions-Lichtschranke Auslauf innen
Reflexions-Lichtschranke Auslauf	=SH==L01+P01/5.6	=SH==L01-X15	54	8	=SH==L01+L18-X15	36	=SH==L01+P01/5.6	Reflexions-Lichtschranke Auslauf
Reserve	=SH==L01+P01/5.7	=SH==L01-X15	55	9	=SH==L01+L18-X15	37	=SH==L01+P01/5.7	Reserve
Reserve	=SH==L01+P01/5.8	=SH==L01-X15	56	10	=SH==L01+L18-X15	38	=SH==L01+P01/5.8	Reserve
Bandfangarm 1 Grundstellung Einlauf	=SH==L01+P01/6.1	=SH==L01-X15	57	11	=SH==L01+L18-X15	39	=SH==L01+P01/6.1	Bandfangarm 1 Grundstellung Einlauf
Bandfangarm 1 zum Coil Einlauf links	=SH==L01+P01/6.2	=SH==L01-X15	58	12	=SH==L01+L18-X15	40	=SH==L01+P01/6.2	Bandfangarm 1 zum Coil Einlauf links
Bandfangarm 2 Grundstellung Auslauf	=SH==L01+P01/6.3	=SH==L01-X15	59	13	=SH==L01+L18-X15	41	=SH==L01+P01/6.3	Bandfangarm 2 Grundstellung Auslauf
Bandfangarm 2 zum Coil Auslauf rechts	=SH==L01+P01/6.4	=SH==L01-X15	60	14	=SH==L01+L18-X15	42	=SH==L01+P01/6.4	Bandfangarm 2 zum Coil Auslauf rechts
Umreifungsaggregat hinten	=SH==L01+P01/6.5	=SH==L01-X15	61	15	=SH==L01+L18-X15	43	=SH==L01+P01/6.5	Umreifungsaggregat hinten
Umreifungsaggregat hinten	=SH==L01+P01/6.6	=SH==L01-X15	62	16	=SH==L01+L18-X15	44	=SH==L01+P01/6.6	Umreifungsaggregat hinten
Umreifungsaggregat vorne	=SH==L01+P01/6.7	=SH==L01-X15	63	17	=SH==L01+L18-X15	45	=SH==L01+P01/6.7	Umreifungsaggregat vorne
Reserve	=SH==L01+P01/6.8	=SH==L01-X15	64	18	=SH==L01+L18-X15	46	=SH==L01+P01/6.8	Reserve
VS11L Kopf vor Packstück B7	=SH==L01+P01/7.6	=SH==L01-X15	70	19	=SH==L01+L18-X15	47	=SH==L01+P01/7.6	VS11L Kopf vor Packstück B7
VS11L Kopf auf Packstück B8	=SH==L01+P01/7.7	=SH==L01-X15	71	20	=SH==L01+L18-X15	48	=SH==L01+P01/7.7	VS11L Kopf auf Packstück B8
				21				
				22				
				23				
				24				
Reserve	=SH==L01+P01/6.8	=SH==L01-X15	PE	PE	=SH==L01+L18-X15	PE	=SH==L01+P01/6.8	Reserve

.4

16

change	date	name	standa		date	26.08.13	Titan Umreifungstechnik		=SH==L01+L10-W51	= SH==AUSW	+ L10
					editor	Lo Grasso	Berliner Straße 51-55	TITAN			
					check.	26.11.13	58332 Schwelm		VS11-H	T13079	Sh. 15
			VDE 0100	origin		replace for	replace through		Möllers		21 Sh.

BI_A3N1D

interconnection diagram

cable name	=SH==L01+L10-W71	cable type	ÖLFLEX-FD 855P		
remark		no. of cores	36/PE	cross-section	1	cable length	–

function text	page/path	destinaton from	pin	core	destinaton to	pin	page/path	function text
VS11L Bandstopschalter B1	=SH==L01+P01/7.1	=SH==L01-X15	29	1	=SH==L01+L19-XS1	A1	=SH==L01+P01/7.1	VS11L Bandstopschalter B1
VS11L Bandstopschalter B1	=SH==L01+P01/7.1	=SH==L01-X15	30	2	=SH==L01+L19-XS1	A2	=SH==L01+P01/7.1	VS11L Bandstopschalter B1
VS11L Luftventil Mittelgang Y1	=SH==M01+P01/5.1	=SH==M01-X16	11	3	=SH==M01+L19-XS1	A3	=SH==M01+P01/5.1	VS11L Luftventil Mittelgang Y1
VS11L Bandstopschalter B1	=SH==L01+P01/7.1	=SH==L01-X15	65	4	=SH==L01+L19-XS1	B1	=SH==L01+P01/7.1	VS11L Bandstopschalter B1
VS11L Zählschalter B2	=SH==L01+P01/7.2	=SH==L01-X15	66	5	=SH==L01+L19-XS1	B2	=SH==L01+P01/7.2	VS11L Zählschalter B2
VS11L O-Position B3	=SH==L01+P01/7.3	=SH==L01-X15	67	6	=SH==L01+L19-XS1	B3	=SH==L01+P01/7.3	VS11L O-Position B3
VS11L Klemmposition B4	=SH==L01+P01/7.4	=SH==L01-X15	68	7	=SH==L01+L19-XS1	B4	=SH==L01+P01/7.4	VS11L Klemmposition B4
VS11L Sicherheitsschalter Klappe auf	=SH==L01+P01/7.5	=SH==L01-X15	69	8	=SH==L01+L19-XS1	C1	=SH==L01+P01/7.5	VS11L Sicherheitsschalter Klappe auf
				9				
				10				
VS11L Service-Schalter Band einlegen	=SH==L01+P01/7.8	=SH==L01-X15	72	11	=SH==L01+L19-XS1	C4	=SH==L01+P01/7.8	VS11L Service-Schalter Band einlegen
VS11L Service-Schalter Verschluß B10	=SH==L01+P01/10.1	=SH==L01-X15	73	12	=SH==L01+L19-XS1	D1	=SH==L01+P01/10.1	VS11L Service-Schalter Verschluß B10
VS11L Reserve	=SH==L01+P01/10.2	=SH==L01-X15	74	13	=SH==L01+L19-XS1	D2	=SH==L01+P01/10.2	VS11L Reserve
VS11L Reserve	=SH==L01+P01/10.3	=SH==L01-X15	75	14	=SH==L01+L19-XS1	D3	=SH==L01+P01/10.3	VS11L Reserve
				15				
				16				
VS11L Luftventil Mittelgang Y1	=SH==M01+P01/5.1	=SH==M01-X16	12	17	=SH==M01+L19-XS1	E1	=SH==M01+P01/5.1	VS11L Luftventil Mittelgang Y1
VS11L Luftventil Eilgang Y2	=SH==M01+P01/5.2	=SH==M01-X16	13	18	=SH==M01+L19-XS1	E2	=SH==M01+P01/5.2	VS11L Luftventil Eilgang Y2
VS11L Transportmotor vor Y3	=SH==M01+P01/5.3	=SH==M01-X16	14	19	=SH==M01+L19-XS1	E3	=SH==M01+P01/5.3	VS11L Transportmotor vor Y3
VS11L Transportmotor zurück Y4	=SH==M01+P01/5.4	=SH==M01-X16	15	20	=SH==M01+L19-XS1	E4	=SH==M01+P01/5.4	VS11L Transportmotor zurück Y4
VS11L Verschlußmotor Y5	=SH==M01+P01/5.5	=SH==M01-X16	16	21	=SH==M01+L19-XS1	F1	=SH==M01+P01/5.5	VS11L Verschlußmotor Y5
VS11L Spannmotor Y6	=SH==M01+P01/5.6	=SH==M01-X16	17	22	=SH==M01+L19-XS1	F2	=SH==M01+P01/5.6	VS11L Spannmotor Y6
VS11L Transportwippe Y7	=SH==M01+P01/5.7	=SH==M01-X16	18	23	=SH==M01+L19-XS1	F3	=SH==M01+P01/5.7	VS11L Transportwippe Y7
VS11L Richtvorrichtung Y8	=SH==M01+P01/5.8	=SH==M01-X16	19	24	=SH==M01+L19-XS1	F4	=SH==M01+P01/5.8	VS11L Richtvorrichtung Y8
VS11L Bandstophebel Y9	=SH==M01+P01/6.1	=SH==M01-X16	20	25	=SH==M01+L19-XS1	G1	=SH==M01+P01/6.1	VS11L Bandstophebel Y9
VS11L Spannwippe angedrückt Y16	=SH==M01+P01/6.2	=SH==M01-X16	21	26	=SH==M01+L19-XS1	G2	=SH==M01+P01/6.2	VS11L Spannwippe angedrückt Y16
VS11L Klappe auf Y17	=SH==M01+P01/6.3	=SH==M01-X16	22	27	=SH==M01+L19-XS1	G3	=SH==M01+P01/6.3	VS11L Klappe auf Y17
VS11L Klappe zu Y18	=SH==M01+P01/6.4	=SH==M01-X16	23	28	=SH==M01+L19-XS1	G4	=SH==M01+P01/6.4	VS11L Klappe zu Y18
				29				
VS11L Reserve	=SH==M01+P01/6.6	=SH==M01-X16	24	30	=SH==M01+L19-XS1	A4	=SH==M01+P01/6.6	VS11L Reserve
VS11L Zählschalter B2	=SH==L01+P01/7.2	=SH==L01-X15	31	31	=SH==L01+L19-XS1	C2	=SH==L01+P01/7.2	VS11L Zählschalter B2
VS11L Zählschalter B2	=SH==L01+P01/7.2	=SH==L01-X15	32	32	=SH==L01+L19-XS1	C3	=SH==L01+P01/7.2	VS11L Zählschalter B2
				33				
				34				
				35				
VS11L Reserve	=SH==M01+P01/6.8	=SH==M01-X16	PE	PE	=SH==M01+L19-XS1	D4	=SH==M01+P01/6.8	VS11L Reserve

BI_A3N1D

interconnection diagram

cable name =SH==M01+L10-W24		cable type ÖLFLEX	
remark		no. of cores 3/PE	cross-section 0.75	cable length –

function text	page/path	destinaton from	pin	core	destinaton to	pin	page/path	function text
Druckluft Hauptabsperrventil	=SH==M01+P01/2.4	=SH==M01-X16	5	1	=SH==M01-Y24	A1	=SH==M01+P01/2.4	Druckluft Hauptabsperrventil
Druckluft Hauptabsperrventil	=SH==M01+P01/2.4	=SH==M01-X16	1	2	=SH==M01-Y24	A2	=SH==M01+P01/2.4	Druckluft Hauptabsperrventil
				PE				

			date	26.08.13	Titan Umreifungstechnik	TITAN	=SH==M01+L10-W24	= SH==AUSW	+L10
			editor	Lo Grasso	Berliner Straße 51-55				
			check.	26.11.13	58332 Schwelm		VS11-H	T13079	Sh. 17
change	date	name	standa	VDE 0100	origin	replace for	replace through	Möllers		21 Sh.

BI_A3N10

interconnection diagram

cable name =SH==M01+L10-W25		cable type IGUS-CF130	
remark		no. of cores 7/PE	cross-section 1.5	cable length –

function text	page/path	destinaton from	pin	core	destinaton to	pin	page/path	function text
Horizontaler Fahrschlitten	=SH==M01+P01/2.5	=SH==M01-X16	6	1	=SH==M01+L18-X16	6	=SH==M01+P01/2.5	Horizontaler Fahrschlitten
Horizontaler Fahrschlitten	=SH==M01+P01/2.5	=SH==M01-X16	2	2	=SH==M01+L18-X16	1	=SH==M01+P01/2.5	Horizontaler Fahrschlitten
Horizontaler Fahrschlitten vorne	=SH==M01+P01/2.6	=SH==M01-X16	7	3	=SH==M01+L18-X16	7	=SH==M01+P01/2.6	Horizontaler Fahrschlitten vorne
Bandführungsarme öffnen Grundstellung	=SH==M01+P01/2.7	=SH==M01-X16	8	4	=SH==M01+L18-X16	8	=SH==M01+P01/2.7	Bandführungsarme öffnen Grundstellung
Bandführungsarme schließen	=SH==M01+P01/2.8	=SH==M01-X16	9	5	=SH==M01+L18-X16	9	=SH==M01+P01/2.8	Bandführungsarme schließen
Bandklemme auf / zu	=SH==M01+P01/3.8	=SH==M01-X16	27	6	=SH==M01+L18-X16	10	=SH==M01+P01/3.8	Bandklemme auf / zu
Bandführungsarme schließen	=SH==M01+P01/2.8	=SH==M01-X16	PE	PE	=SH==M01+L18-X16	PE	=SH==M01+P01/2.8	Bandführungsarme schließen

			date	26.08.13	Titan Umreifungstechnik	TITAN	=SH==M01+L10-W25	= SH==AUSW	+L10
			editor	Lo Grasso	Berliner Straße 51-55				
			check.	26.11.13	58332 Schwelm		VS11-H	T13079	Sh. 18
change	date	name	standa	VDE 0100	origin	replace for	replace through	Möllers		21 Sh.

0	1	2	3	4	5	6	7	8	9

BI_A3N1D

interconnection diagram

cable name =SH==M01+L10-W37	cable type ÖLFLEX		
remark	no. of cores 3/PE	cross-section 0.75	cable length –

function text	page/path	destinaton from	pin	core	destinaton to	pin	page/path	function text
VS11 Umreifungsaggregat	=SH==M01+P01/3.7	=SH==M01-X16	25	1	=SH==M01-Y37	A1	=SH==M01+P01/3.7	VS11 Umreifungsaggregat
VS11 Umreifungsaggregat	=SH==M01+P01/3.7	=SH==M01-X16	26	2	=SH==M01-Y37	A2	=SH==M01+P01/3.7	VS11 Umreifungsaggregat
				PE				

18 20

			date	26.08.13	Titan Umreifungstechnik	TITAN	=SH==M01+L10-W37	= SH==AUSW	+ L10
			editor	Lo Grasso	Berliner Straße 51-55				
			check.	26.11.13	58332 Schwelm		VS11-H	T13079	Sh. 19
change	date	name	standa	VDE 0100	origin / replace for / replace through		Möllers		21 Sh.

BI_A3N1D

interconnection diagram

cable name =SH==X03+L10-W51		cable type IGUS-CF130	
remark		no. of cores 25/PE	cross-section 1.5	cable length –

function text	page/path	destinaton from	pin	core	destinaton to	pin	page/path	function text
				1				
				2				
				3				
				4				
				5				
				6				
				7				
				8				
				9				
				10				
				11				
				12				
				13				
				14				
				15				
				16				
				17				
				18				
				19				
				20				
Grundstellung Maschine	=SH==X03+P01/3.3	=SH==L01-X15	79	21	=SH==L01+L18-X15	49	=SH==X03+P01/3.3	Grundstellung Maschine
Grundstellung Maschine	=SH==X03+P01/3.4	=SH==L01-X15	80	22	=SH==L01+L18-X15	50	=SH==X03+P01/3.4	Grundstellung Maschine
				23				
				24				
				PE				

			date	26.08.13	Titan Umreifungstechnik	TITAN	=SH==X03+L10-W51	= SH==AUSW	+L10
			editor	Lo Grasso	Berliner Straße 51-55				
			check.	26.11.13	58332 Schwelm		VS11-H	T13079	Sh. 20
change	date	name	standa	VDE 0100	origin	replace for	replace through	Möllers		21 Sh.

BI_A302D_PRO

parts list

pos.	designation	amount	designation		order number	function text
10	=SH==DOKU+L10	1	Kompakt-Schaltschrank	600x380x210	08849904059	
11	=SH==L01+L10-B33	1	Induktiver Näherungsschalter	M12x1, 4b	08211000530	Bolzen Hubantrieb
12	=SH==L01+L10-B33	1	Kabeldose	mit LED 4 adrig / M12x1 / 10m	08336001044	Bolzen Hubantrieb
13	=SH==L01+L10-B34	1	Induktiver Näherungsschalter	40x40mm, Schaltabstand 20 mm	08336000168	Hubantrieb unten Stop
14	=SH==L01+L10-B34	1	Kabeldose	mit LED 4 adrig / M12x1 / 10m	08336001044	Hubantrieb unten Stop
15	=SH==L01+L10-S31	1	Basisschalter	Sprungkontakte 2S+2OE	08310000149	Hubantrieb oben Grundstellung
16	=SH==L01+L10-S31	1	Antriebskopf für Positionssch.		08310000148	Hubantrieb oben Grundstellung
17	=SH==L01+L10-S31	1	Schwenkhebel f. Positionssch.	Metallhebel 27mm m. Stahlrolle	08332300771	Hubantrieb oben Grundstellung
18	=SH==L01+L10-S35	1	Pneumatisches Bauteil	siehe Mechanik-Stückliste		
19	=SH==L01+L10-S48	1	Pneumatisches Bauteil	siehe Mechanik-Stückliste		
20	=SH==M01+L10-Y24	1	Mechanisches Bauteil	siehe Mechanik-Stückliste		Druckluft Hauptabsperrventil
21	=SH==M01+L10-Y37	1	Mechanisches Bauteil	siehe Mechanik-Stückliste		VS11 Umreifungsaggregat

			date	26.08.13	Titan Umreifungstechnik	TITAN	Stückliste	= SH==AUSW	+L10
			editor	Lo Grasso	Berliner Straße 51-55				
			check.	26.11.13	58332 Schwelm		VS11-H	T13079	Sh. 21
change	date	name	standa	VDE 0100	origin	replace for	replace through	Möllers	21 Sh.

BI_A3R1D

terminal strip and connector overview

terminal strip and connector designation	text of the strip definition	terminals / connectors					graphic page of the terminal strip
		first	last	amount PE	amount N	totally amount	
=SH==L01+L18-X15		1	PE	3	0	53	=SH==AUSW+L18/2
=SH==M01+L18-X16		1	10	1	0	11	=SH==AUSW+L18/7

+L10/21

			date	26.08.13	Titan Umreifungstechnik	TITAN	Klemmenleisten- und Steckerübersichtsplan	= SH==AUSW	+L18
			editor	Lo Grasso	Berliner Straße 51-55				
			check.	26.11.13	58332 Schwelm		VS11-H	T13079	Sh. 1
change	date	name	standa	VDE 0100	origin	replace for / replace through	Möllers		26 Sh.

0 | 1 | 2 | 3 | 4 | 5 | 6 | 7 | 8 | 9
BI_A3K2D

terminal diagram

function text	=SH==L01+L18-W62 PUR	=SH==L01+L18-W61 PUR	=SH==L01+L18-W56 UNITRONIC LifYY	=SH==L01+L18-W55 UNITRONIC LifYY	=SH==L01+L18-W54 UNITRONIC LifYY	=SH==L01+L18-W53 UNITRONIC LifYY	=SH==L01+L18-W52 UNITRONIC LifYY	=SH==L01+L18-W51 UNITRONIC LifYY	cable name typ	terminal strip designation =SH==L01+L18-X15 target destination	connection	terminal number	jumper	connection name	target destination	connection	cable name typ	=SH==L01+L10-W51 IGUS-CF130				page/path
Reflexions-Lichtschranke Einlauf								BN		-B51	1	1			+L10-X15	14		1				=SH==L01+P01/5.1
Reflexions-Lichtschranke Einlauf							BN			-B52	1	2										=SH==L01+P01/5.2
Kanalarmüberwachung am						BN				-B53	1	3										=SH==L01+P01/5.3
Kanalarmüberwachung am Ausleger					BN					-B54	1	4										=SH==L01+P01/5.4
Reflexions-Lichtschranke Auslauf				BN						-B55	1	5										=SH==L01+P01/5.5
Reflexions-Lichtschranke Auslauf			BN							-B56	1	6										=SH==L01+P01/5.6
-												7										=SH==L01+P01/5.7
Reserve												8										=SH==L01+P01/5.8
Bandfangarm 1 Grundstellung Einlauf		BN								-B61	1	9										=SH==L01+P01/6.1
Bandfangarm 1 zum Coil Einlauf	BN									-B62	1	10										=SH==L01+P01/6.2

			date	26.08.13	Titan Umreifungstechnik	TITAN	=SH==L01+L18-X15	= SH==AUSW	+ L18
			editor	Lo Grasso	Berliner Straße 51-55				
			check.	26.11.13	58332 Schwelm		VS11-H	T13079	Sh. 2
change	date	name	standa	VDE 0100	origin	replace for	replace through	Möllers	26 Sh.

BI_A3K2D

terminal diagram

terminal strip designation

=SH==L01+L18-X15

function text	=SH==L01+L18-W54	=SH==L01+L18-W53	=SH==L01+L18-W52	=SH==L01+L18-W51	=SH==L01+P01-W76	=SH==L01+L18-W65	=SH==L01+L18-W64	=SH==L01+L18-W63	cable name	target destination	connection	terminal number	jumper	connection name	target destination	connection	cable name	=SH==L01+L18-W67	=SH==L01+L10-W51			page/path
	UNITRONIC LiFYY	UNITRONIC LiFYY	UNITRONIC LiFYY	UNITRONIC LiFYY	PUR	ÖLFLEX	PUR	PUR	typ								typ	PUR	IGUS-CF130			
Bandfangarm Z Grundstellung Auslauf								BN		-B63	1	11										=SH==L01+P01/6.3
Bandfangarm Z zum Coil Auslauf							BN			-B64	1	12										=SH==L01+P01/6.4
Umreifungsaggregat hinten						1				-S65	13	13										=SH==L01+P01/6.5
-						3				-S65	21	14			-B67	1		BN				=SH==L01+P01/6.6
Reserve					BN					-B76	1	15										=SH==L01+P01/6.8
Reflexions-Lichtschranke Einlauf				BU						-B51	3	16			+L10-X15	28			2			=SH==L01+P01/5.1
Reflexions-Lichtschranke Einlauf			BU							-B52	3	17										=SH==L01+P01/5.2
Kanalarmüberwachung am		BU								-B53	3	18										=SH==L01+P01/5.3
Kanalarmüberwachung am Ausleger	BU									-B54	3	19										=SH==L01+P01/5.4

2

4

			date	26.08.13	Titan Umreifungstechnik	TITAN	=SH==L01+L18-X15	= SH==AUSW	+ L18
			editor	Lo Grasso	Berliner Straße 51-55				
			check.	26.11.13	58332 Schwelm		VS11-H	T13079	Sh. 3
change	date	name	standa	VDE 0100	origin	replace for	replace through	Möllers		26 Sh.

BI_A3K2D

terminal diagram

terminal strip designation

=SH==L01+L18-X15

function text	=SH==L01+L18-W51	=SH==L01+P01-W76	=SH==L01+L18-W64	=SH==L01+L18-W63	=SH==L01+L18-W62	=SH==L01+L18-W61	=SH==L01+L18-W56	=SH==L01+L18-W55	cable name	target destination	connection	terminal number	jumper	connection name	target destination	connection	cable name	=SH==L01+L18-W67	=SH==L01+L10-W51			page/path
	UNITRONIC LiFY	PUR	PUR	PUR	PUR	PUR	UNITRONIC LiFY	UNITRONIC LiFY	typ								typ	PUR	IGUS-CF130			
Reflexions-Lichtschranke Auslauf								BU		-B55	3	20										=SH==L01+P01/5.5
Reflexions-Lichtschranke Auslauf							BU			-B56	3	21										=SH==L01+P01/5.6
Reserve												22										=SH==L01+P01/5.7
-												23										=SH==L01+P01/5.8
Bandfangarm 1 Grundstellung Einlauf						BU				-B61	3	24										=SH==L01+P01/6.1
Bandfangarm 1 zum Coil Einlauf					BU					-B62	3	25										=SH==L01+P01/6.2
Bandfangarm 2 Grundstellung Auslauf				BU						-B63	3	26										=SH==L01+P01/6.3
Bandfangarm 2 zum Coil Auslauf			BU							-B64	3	27										=SH==L01+P01/6.4
Umreifungsaggregat hinten												28										=SH==L01+P01/6.5
-												29			-B67	3		BU				=SH==L01+P01/6.6
Reserve		BU								-B76	3	30										=SH==L01+P01/6.8
Reflexions-Lichtschranke Einlauf	BK									-B51	4	31	o	E8.0	+L10-X15	49			3			=SH==L01+P01/5.1

3 5

			date	26.08.13	Titan Umreifungstechnik	TITAN	=SH==L01+L18-X15	= SH==AUSW	+L18
			editor	Lo Grasso	Berliner Straße 51-55				
			check.	26.11.13	58332 Schwelm		VS11-H	T13079	Sh. 4
change	date	name	standa	VDE 0100	origin	replace for	replace through	Möllers	26 Sh.

BI_A3K2D

terminal diagram

terminal strip designation

=SH==L01+L18-X15

function text	=SH==L01+L18-W63	=SH==L01+L18-W62	=SH==L01+L18-W61	=SH==L01+L18-W56	=SH==L01+L18-W55	=SH==L01+L18-W54	=SH==L01+L18-W53	=SH==L01+L18-W52	cable name	target destination	connection	terminal number	jumper	connection name	target destination	connection	cable name	=SH==L01+L10-W51	page/path
	PUR	PUR	PUR	UNITRONIC LiFYY	UNITRONIC LiFYY	UNITRONIC LiFYY	UNITRONIC LiFYY	UNITRONIC LiFYY	typ								typ	IGUS-CF130	
Reflexions-Lichtschranke Einlauf								BK		-B52	4	32	o	E8.1	+L10-X15	50		4	=SH==L01+P01/5.2
Kanalarmüberwachung am							BK			-B53	4	33	o	E8.2	+L10-X15	51		5	=SH==L01+P01/5.3
Kanalarmüberwachung am Ausleger						BK				-B54	4	34	o	E8.3	+L10-X15	52		6	=SH==L01+P01/5.4
Reflexions-Lichtschranke Auslauf					BK					-B55	4	35	o	E8.4	+L10-X15	53		7	=SH==L01+P01/5.5
Reflexions-Lichtschranke Auslauf				BK						-B56	4	36	o	E7.1	+L10-X15	54		8	=SH==L01+P01/5.6
Reserve												37	o	E7.2	+L10-X15	55		9	=SH==L01+P01/5.7
-												38	o	E7.4	+L10-X15	56		10	=SH==L01+P01/5.8
Bandfangarm 1 Grundstellung Einlauf			BK							-B61	4	39	o	E2.0	+L10-X15	57		11	=SH==L01+P01/6.1
Bandfangarm 1 zum Coil Einlauf		BK								-B62	4	40	o	E2.1	+L10-X15	58		12	=SH==L01+P01/6.2
Bandfangarm 2 Grundstellung Auslauf	BK									-B63	4	41	o	E2.2	+L10-X15	59		13	=SH==L01+P01/6.3

change	date	name					
			date	26.08.13	Titan Umreifungstechnik	TITANO	=SH==L01+L18-X15
			editor	Lo Grasso	Berliner Straße 51-55		VS11-H
			check.	26.11.13	58332 Schwelm		
			standa	VDE 0100	origin	replace for	replace through

= SH==AUSW	+L18	
T13079		Sh. 5
		26 Sh.

0 1 2 3 4 5 6 7 8 9

BI_A3K2D

terminal diagram

function text			=SH==X03+L10-W51 IGUS-CF130	=SH==L01+P01-W77 PUR	=SH==L01+P01-W76 PUR	=SH==L01+L18-W67 PUR	=SH==L01+L18-W65 ÖLFLEX	=SH==L01+L18-W64 PUR	cable name typ	terminal strip designation =SH==L01+L18-X15 target destination	connection	terminal number	jumper	connection name	target destination	connection	cable name typ	=SH==L01+L10-W51 IGUS-CF130	=SH==L01+L18-W65 ÖLFLEX			page/path
Bandfangarm 2 zum Coil Auslauf								BK		-B64	4	42	o	E2.3	+L10-X15	60		14				=SH==L01+P01/6.4
Umreifungsaggregat hinten							2			-S65	14	43	o	E2.4	+L10-X15	61		15				=SH==L01+P01/6.5
-							4			-S65	22	44	o	E2.5	+L10-X15	62		16				=SH==L01+P01/6.6
Umreifungsaggregat vorne						BK				-B67	4	45	o	E2.6	+L10-X15	63		17				=SH==L01+P01/6.7
Reserve												46	o	E2.7	+L10-X15	64		18				=SH==L01+P01/6.8
VS11L Kopf vor Packstück B7					BK					-B76	4	47	o	E9.5	+L10-X15	70		19				=SH==L01+P01/7.6
VS11L Kopf auf Packstück B8				BK						-B77	4	48	o	E9.6	+L10-X15	71		20				=SH==L01+P01/7.7
Grundstellung Maschine			21							+L10-X15	79	49	o		-S65	34			5			=SH==X03+P01/3.3
-			22							+L10-X15	80	50	o		-S65	33			6			=SH==X03+P01/3.4
Reserve												PE	o		+L10-X15	PE		PE				=SH==L01+P01/6.8
-												PE	o									=SH==L01+P01/6.8
Grundstellung Maschine												PE	o		.				PE			=SH==X03+P01/3.4

5 7

			date	26.08.13	Titan Umreifungstechnik	TITAN	=SH==L01+L18-X15	= SH==AUSW	+ L18
			editor	Lo Grasso	Berliner Straße 51-55				
			check.	26.11.13	58332 Schwelm		VS11-H	T13079	Sh. 6
change	date	name	standa	VDE 0100	origin / replace for / replace through		Möllers		26 Sh.

terminal diagram

BI_A3K2D

function text				=SH==M01+L18-W38 ÖLFLEX	=SH==M01+L18-W28 ÖLFLEX	=SH==M01+L18-W27 ÖLFLEX	=SH==M01+L18-W26 ÖLFLEX	=SH==M01+L18-W25 ÖLFLEX	cable name typ	terminal strip designation =SH==M01+L18-X16 target destination	connection	terminal number	jumper	connection name	target destination	connection	cable name typ	=SH==M01+L10-W25 IGUS-CF130	=SH==M01+L18-W38 ÖLFLEX			page/path
Horizontaler Fahrschlitten								2		-Y25	A2	1			+L10-X16	2		2				=SH==M01+P01/2.5
Horizontaler Fahrschlitten vorne							2			-Y26	A2	2										=SH==M01+P01/2.6
Bandführungsarme öffnen						2				-Y27	A2	3										=SH==M01+P01/2.7
Bandführungsarme schließen					2					-Y28	A2	4										=SH==M01+P01/2.8
Bandklemme auf / zu												5			-Y38	A2			2			=SH==M01+P01/3.8
Horizontaler Fahrschlitten								1		-Y25	A1	6		A13.1	+L10-X16	6		1				=SH==M01+P01/2.5
Horizontaler Fahrschlitten vorne							1			-Y26	A1	7		A13.2	+L10-X16	7		3				=SH==M01+P01/2.6
Bandführungsarme öffnen						1				-Y27	A1	8		A13.3	+L10-X16	8		4				=SH==M01+P01/2.7
Bandführungsarme schließen					1					-Y28	A1	9		A13.4	+L10-X16	9		5				=SH==M01+P01/2.8
-										PE		PE		PE	+L10-X16	PE		PE				=SH==M01+P01/2.8
Bandklemme auf / zu				1						-Y38	A1	10		A14.7	+L10-X16	27		6				=SH==M01+P01/3.8

6

8

			date	26.08.13	Titan Umreifungstechnik	TITAN	=SH==M01+L18-X16	= SH==AUSW	+ L18
			editor	Lo Grasso	Berliner Straße 51-55				
			check.	26.11.13	58332 Schwelm		VS11-H	T13079	Sh. 7
change	date	name	standa	VDE 0100	origin / replace for / replace through		Möllers		26 Sh.

BI_A3S20

cable overview

cable name cable designation	source by	target to	cable type	total cores	used cores	cross-section mm²	m	remark	graphics - page
=SH==L01+L18-W51	=SH==L01-X15	=SH==L01-B51	UNITRONIC LifYY	4	3	0.34	-		/9
=SH==L01+L18-W52	=SH==L01-X15	=SH==L01-B52	UNITRONIC LifYY	4	3	0.34	-		/10
=SH==L01+L18-W53	=SH==L01-X15	=SH==L01-B53	UNITRONIC LifYY	4	3	0.34	-		/11
=SH==L01+L18-W54	=SH==L01-X15	=SH==L01-B54	UNITRONIC LifYY	4	3	0.34	-		/12
=SH==L01+L18-W55	=SH==L01-X15	=SH==L01-B55	UNITRONIC LifYY	4	3	0.34	-		/13
=SH==L01+L18-W56	=SH==L01-X15	=SH==L01-B56	UNITRONIC LifYY	4	3	0.34	-		/14
=SH==L01+L18-W61	=SH==L01-X15	=SH==L01-B61	PUR	3	3	0.34	-		/15
=SH==L01+L18-W62	=SH==L01-X15	=SH==L01-B62	PUR	3	3	0.34	-		/16
=SH==L01+L18-W63	=SH==L01-X15	=SH==L01-B63	PUR	3	3	0.34	-		/17
=SH==L01+L18-W64	=SH==L01-X15	=SH==L01-B64	PUR	3	3	0.34	-		/18
=SH==L01+L18-W65			ÖLFLEX	7/PE	7/PE	1.5	-		/19
	=SH==L01-X15	=SH==L01-S65		7/PE	6	1.5			/19
	=SH==L01-X15	.		7/PE	1/PE	1.5			/19
=SH==L01+L18-W67	=SH==L01-X15	=SH==L01-B67	PUR	4	3	0.34	-		/20
=SH==M01+L18-W25	=SH==M01-X16	=SH==M01-Y25	ÖLFLEX	3/PE	2	0.75	-		/21
=SH==M01+L18-W26	=SH==M01-X16	=SH==M01-Y26	ÖLFLEX	3/PE	2	0.75	-		/22
=SH==M01+L18-W27	=SH==M01-X16	=SH==M01-Y27	ÖLFLEX	3/PE	2	0.75	-		/23
=SH==M01+L18-W28	=SH==M01-X16	=SH==M01-Y28	ÖLFLEX	3/PE	2	0.75	-		/24
=SH==M01+L18-W38	=SH==M01-X16	=SH==M01-Y38	ÖLFLEX	3/PE	2	0.75	-		/25

			date	26.08.13	Titan Umreifungstechnik	TITAN	Kabelübersicht	= SH==AUSW	+L18	
			editor	Lo Grasso	Berliner Straße 51-55					
			check.	26.11.13	58332 Schwelm		VS11-H	T13079		Sh. 8
change	date	name	standa	VDE 0100	origin	replace for	replace through	Möllers		26 Sh.

BI_A3N1D

interconnection diagram

cable name	=SH==L01+L18-W51	cable type	UNITRONIC LifYY		
remark		no. of cores 4	cross-section 0.34	cable length –	

function text	page/path	destinaton from	pin	core	destinaton to	pin	page/path	function text
Reflexions-Lichtschranke Einlauf	=SH==L01+P01/5.1	=SH==L01-X15	1	BN	=SH==L01-B51	1	=SH==L01+P01/5.1	Reflexions-Lichtschranke Einlauf
Reflexions-Lichtschranke Einlauf	=SH==L01+P01/5.1	=SH==L01-X15	16	BU	=SH==L01-B51	3	=SH==L01+P01/5.1	Reflexions-Lichtschranke Einlauf
Reflexions-Lichtschranke Einlauf	=SH==L01+P01/5.1	=SH==L01-X15	31	BK	=SH==L01-B51	4	=SH==L01+P01/5.1	Reflexions-Lichtschranke Einlauf
				WH				

8

10

change	date	name						
			date	26.08.13	Titan Umreifungstechnik	TITAN	=SH==L01+L18-W51	= SH==AUSW	+L18
			editor	Lo Grasso	Berliner Straße 51-55				
			check.	26.11.13	58332 Schwelm		VS11-H	T13079	Sh. 9
			standa	VDE 0100	origin	replace for	replace through	Möllers		26 Sh.

0	1	2	3	4	5	6	7	8	9

BI_A3N1D

interconnection diagram

cable name =SH==L01+L18-W52		cable type UNITRONIC LifYY	
remark		no. of cores 4	cross-section 0.34	cable length -

function text	page/path	destinaton from	pin	core	destinaton to	pin	page/path	function text
Reflexions-Lichtschranke Einlauf innen	=SH==L01+P01/5.2	=SH==L01-X15	2	BN	=SH==L01-B52	1	=SH==L01+P01/5.2	Reflexions-Lichtschranke Einlauf innen
Reflexions-Lichtschranke Einlauf innen	=SH==L01+P01/5.2	=SH==L01-X15	17	BU	=SH==L01-B52	3	=SH==L01+P01/5.2	Reflexions-Lichtschranke Einlauf innen
Reflexions-Lichtschranke Einlauf innen	=SH==L01+P01/5.2	=SH==L01-X15	32	BK	=SH==L01-B52	4	=SH==L01+P01/5.2	Reflexions-Lichtschranke Einlauf innen
				WH				

9

11

			date	26.08.13	Titan Umreifungstechnik	TITAN	=SH==L01+L18-W52	= SH==AUSW	+ L18
			editor	Lo Grasso	Berliner Straße 51-55				
			check.	26.11.13	58332 Schwelm		VS11-H	T13079	Sh. 10
change	date	name	standa	VDE 0100	origin / replace for / replace through		Möllers		26 Sh.

BI_A3N1D

interconnection diagram

cable name	=SH==L01+L18-W53	cable type	UNITRONIC LiFYY		
remark		no. of cores 4	cross-section 0.34	cable length –	

function text	page/path	destinaton from	pin	core	destinaton to	pin	page/path	function text
Kanalarmüberwachung am	=SH==L01+P01/5.3	=SH==L01-X15	3	BN	=SH==L01-B53	1	=SH==L01+P01/5.3	Kanalarmüberwachung am
Kanalarmüberwachung am	=SH==L01+P01/5.3	=SH==L01-X15	18	BU	=SH==L01-B53	3	=SH==L01+P01/5.3	Kanalarmüberwachung am
Kanalarmüberwachung am	=SH==L01+P01/5.3	=SH==L01-X15	33	BK	=SH==L01-B53	4	=SH==L01+P01/5.3	Kanalarmüberwachung am
				WH				

10

12

			date	26.08.13	Titan Umreifungstechnik	TITAN	=SH==L01+L18-W53	= SH==AUSW	+L18
			editor	Lo Grasso	Berliner Straße 51-55				
			check.	26.11.13	58332 Schwelm		VS11-H	T13079	Sh. 11
change	date	name	standa	VDE 0100	origin	replace for / replace through	Möllers		26 Sh.

BI_A3N1D

interconnection diagram

cable name	=SH==L01+L18-W54	cable type	UNITRONIC LiFYY		
remark		no. of cores	4	cross-section	0.34	cable length	-

function text	page/path	destinaton from	pin	core	destinaton to	pin	page/path	function text
Kanalarmüberwachung am Ausleger	=SH==L01+P01/5.4	=SH==L01-X15	4	BN	=SH==L01-B54	1	=SH==L01+P01/5.4	Kanalarmüberwachung am Ausleger
Kanalarmüberwachung am Ausleger	=SH==L01+P01/5.4	=SH==L01-X15	19	BU	=SH==L01-B54	3	=SH==L01+P01/5.4	Kanalarmüberwachung am Ausleger
Kanalarmüberwachung am Ausleger	=SH==L01+P01/5.4	=SH==L01-X15	34	BK	=SH==L01-B54	4	=SH==L01+P01/5.4	Kanalarmüberwachung am Ausleger
				WH				

11

13

change	date	name	standa	VDE 0100	origin	replace for	replace through
			date	26.08.13			
			editor	Lo Grasso			
			check.	26.11.13			

Titan Umreifungstechnik
Berliner Straße 51-55
58332 Schwelm

TITANO

=SH==L01+L18-W54

VS11-H

Möllers

= SH==AUSW

+L18

T13079

Sh. 12
26 Sh.

0	1	2	3	4	5	6	7	8	9

BI_A3N1D

interconnection diagram

cable name =SH==L01+L18-W55		cable type UNITRONIC LifYY	
remark		no. of cores 4	cross-section 0.34	cable length –

function text	page/path	destinaton from	pin	core	destinaton to	pin	page/path	function text
Reflexions-Lichtschranke Auslauf innen	=SH==L01+P01/5.5	=SH==L01-X15	5	BN	=SH==L01-B55	1	=SH==L01+P01/5.5	Reflexions-Lichtschranke Auslauf innen
Reflexions-Lichtschranke Auslauf innen	=SH==L01+P01/5.5	=SH==L01-X15	20	BU	=SH==L01-B55	3	=SH==L01+P01/5.5	Reflexions-Lichtschranke Auslauf innen
Reflexions-Lichtschranke Auslauf innen	=SH==L01+P01/5.5	=SH==L01-X15	35	BK	=SH==L01-B55	4	=SH==L01+P01/5.5	Reflexions-Lichtschranke Auslauf innen
				WH				

12

14

			date	26.08.13	Titan Umreifungstechnik	TITAN	=SH==L01+L18-W55	= SH==AUSW	+ L18
			editor	Lo Grasso	Berliner Straße 51-55				
			check.	26.11.13	58332 Schwelm		VS11-H	T13079	Sh. 13
change	date	name	standa	VDE 0100	origin / replace for / replace through		Möllers		26 Sh.

0	1	2	3	4	5	6	7	8	9

BI_A3N10

interconnection diagram

cable name =SH==L01+L18-W56	cable type UNITRONIC LifYY		
remark	no. of cores 4	cross-section 0.34	cable length -

function text	page/path	destinaton from	pin	core	destinaton to	pin	page/path	function text
Reflexions-Lichtschranke Auslauf	=SH==L01+P01/5.6	=SH==L01-X15	6	BN	=SH==L01-B56	1	=SH==L01+P01/5.6	Reflexions-Lichtschranke Auslauf
Reflexions-Lichtschranke Auslauf	=SH==L01+P01/5.6	=SH==L01-X15	21	BU	=SH==L01-B56	3	=SH==L01+P01/5.6	Reflexions-Lichtschranke Auslauf
Reflexions-Lichtschranke Auslauf	=SH==L01+P01/5.6	=SH==L01-X15	36	BK	=SH==L01-B56	4	=SH==L01+P01/5.6	Reflexions-Lichtschranke Auslauf
				WH				

13 15

			date	26.08.13	Titan Umreifungstechnik	TITAN	=SH==L01+L18-W56	= SH==AUSW	+ L18
			editor	Lo Grasso	Berliner Straße 51-55				
			check.	26.11.13	58332 Schwelm		VS11-H	T13079	Sh. 14
change	date	name	standa	VDE 0100	origin	replace for	replace through	Möllers	26 Sh.

BI_A3N1D

interconnection diagram

cable name =SH==L01+L18-W61		cable type PUR	
remark		no. of cores 3	cross-section 0.34 / cable length –

function text	page/path	destinaton from	pin	core	destinaton to	pin	page/path	function text
Bandfangarm 1 Grundstellung Einlauf	=SH==L01+P01/6.1	=SH==L01-X15	9	BN	=SH==L01-B61	1	=SH==L01+P01/6.1	Bandfangarm 1 Grundstellung Einlauf
Bandfangarm 1 Grundstellung Einlauf	=SH==L01+P01/6.1	=SH==L01-X15	24	BU	=SH==L01-B61	3	=SH==L01+P01/6.1	Bandfangarm 1 Grundstellung Einlauf
Bandfangarm 1 Grundstellung Einlauf	=SH==L01+P01/6.1	=SH==L01-X15	39	BK	=SH==L01-B61	4	=SH==L01+P01/6.1	Bandfangarm 1 Grundstellung Einlauf

change	date	name			
			date	26.08.13	
			editor	Lo Grasso	
			check.	26.11.13	
			standa	VDE 0100	

Titan Umreifungstechnik
Berliner Straße 51-55
58332 Schwelm

origin | replace for | replace through

TITAN

=SH==L01+L18-W61
VS11-H
Möllers

= SH==AUSW | +L18

T13079

Sh. 15
26 Sh.

BI_A3N1D

interconnection diagram

cable name	=SH==L01+L18-W62	cable type	PUR		
remark		no. of cores	3	cross-section	0.34

function text	page/path	destinaton from	pin	core	destinaton to	pin	page/path	function text
Bandfangarm 1 zum Coil Einlauf links	=SH==L01+P01/6.2	=SH==L01-X15	10	BN	=SH==L01-B62	1	=SH==L01+P01/6.2	Bandfangarm 1 zum Coil Einlauf links
Bandfangarm 1 zum Coil Einlauf links	=SH==L01+P01/6.2	=SH==L01-X15	25	BU	=SH==L01-B62	3	=SH==L01+P01/6.2	Bandfangarm 1 zum Coil Einlauf links
Bandfangarm 1 zum Coil Einlauf links	=SH==L01+P01/6.2	=SH==L01-X15	40	BK	=SH==L01-B62	4	=SH==L01+P01/6.2	Bandfangarm 1 zum Coil Einlauf links

15

17

change	date	name			
			date	26.08.13	
			editor	Lo Grasso	
			check.	26.11.13	
			standa	VDE 0100	

Titan Umreifungstechnik
Berliner Straße 51-55
58332 Schwelm

origin | replace for | replace through

=SH==L01+L18-W62
VS11-H
Möllers

= SH==AUSW | +L18

T13079

Sh. 16
26 Sh.

0	1	2	3	4	5	6	7	8	9

BI_A3N1D

interconnection diagram

cable name =SH==L01+L18-W63	cable type PUR		
remark	no. of cores 3	cross-section 0.34	cable length -

function text	page/path	destinaton from	pin	core	destinaton to	pin	page/path	function text
Bandfangarm 2 Grundstellung Auslauf	=SH==L01+P01/6.3	=SH==L01-X15	11	BN	=SH==L01-B63	1	=SH==L01+P01/6.3	Bandfangarm 2 Grundstellung Auslauf
Bandfangarm 2 Grundstellung Auslauf	=SH==L01+P01/6.3	=SH==L01-X15	26	BU	=SH==L01-B63	3	=SH==L01+P01/6.3	Bandfangarm 2 Grundstellung Auslauf
Bandfangarm 2 Grundstellung Auslauf	=SH==L01+P01/6.3	=SH==L01-X15	41	BK	=SH==L01-B63	4	=SH==L01+P01/6.3	Bandfangarm 2 Grundstellung Auslauf

16

18

			date	26.08.13	Titan Umreifungstechnik	TITAN	=SH==L01+L18-W63	= SH==AUSW	+ L18
			editor	Lo Grasso	Berliner Straße 51-55				
			check.	26.11.13	58332 Schwelm		VS11-H	T13079	Sh. 17
change	date	name	standa	VDE 0100	origin / replace for / replace through		Möllers		26 Sh.

BI_A3N1D

interconnection diagram

cable name	=SH==LO1+L18-W64	cable type	PUR		
remark		no. of cores	3	cross-section	0.34	cable length	–

function text	page/path	destinaton from	pin	core	destinaton to	pin	page/path	function text
Bandfangarm 2 zum Coil Auslauf rechts	=SH==LO1+P01/6.4	=SH==LO1-X15	12	BN	=SH==LO1-B64	1	=SH==LO1+P01/6.4	Bandfangarm 2 zum Coil Auslauf rechts
Bandfangarm 2 zum Coil Auslauf rechts	=SH==LO1+P01/6.4	=SH==LO1-X15	27	BU	=SH==LO1-B64	3	=SH==LO1+P01/6.4	Bandfangarm 2 zum Coil Auslauf rechts
Bandfangarm 2 zum Coil Auslauf rechts	=SH==LO1+P01/6.4	=SH==LO1-X15	42	BK	=SH==LO1-B64	4	=SH==LO1+P01/6.4	Bandfangarm 2 zum Coil Auslauf rechts

change	date	name						
			standa	VDE 0100	origin	replace for	replace through	
			check.	26.11.13				
			editor	Lo Grasso				
			date	26.08.13				

Titan Umreifungstechnik
Berliner Straße 51-55
58332 Schwelm

TITAN

=SH==LO1+L18-W64
VS11-H
Möllers

= SH==AUSW
+L18
T13079

Sh. 18
26 Sh.

BI_A3N1D

interconnection diagram

cable name	=SH==L01+L18-W65	cable type	ÖLFLEX		
remark		no. of cores	7/PE	cross-section	1.5

function text	page/path	destinaton from	pin	core	destinaton to	pin	page/path	function text
Umreifungsaggregat hinten	=SH==L01+P01/6.5	=SH==L01-X15	13	1	=SH==L01-S65	13	=SH==L01+P01/6.5	Umreifungsaggregat hinten
Umreifungsaggregat hinten	=SH==L01+P01/6.5	=SH==L01-X15	43	2	=SH==L01-S65	14	=SH==L01+P01/6.5	Umreifungsaggregat hinten
Umreifungsaggregat hinten	=SH==L01+P01/6.6	=SH==L01-X15	14	3	=SH==L01-S65	21	=SH==L01+P01/6.5	Umreifungsaggregat hinten
Umreifungsaggregat hinten	=SH==L01+P01/6.6	=SH==L01-X15	44	4	=SH==L01-S65	22	=SH==L01+P01/6.5	Umreifungsaggregat hinten
Grundstellung Maschine	=SH==X03+P01/3.3	=SH==L01-X15	49	5	=SH==L01-S65	34	=SH==L01+P01/6.5	Umreifungsaggregat hinten
Grundstellung Maschine	=SH==X03+P01/3.4	=SH==L01-X15	50	6	=SH==L01-S65	33	=SH==L01+P01/6.5	Umreifungsaggregat hinten
Grundstellung Maschine	=SH==X03+P01/3.4	=SH==L01-X15	PE	PE				

18

20

change	date	name	standa	date	26.08.13	Titan Umreifungstechnik	=SH==L01+L18-W65	= SH==AUSW	+L18
				editor	Lo Grasso	Berliner Straße 51-55			
				check.	26.11.13	58332 Schwelm	VS11-H	T13079	Sh. 19
			VDE 0100	origin	replace for	replace through	Möllers		26 Sh.

0	1	2	3	4	5	6	7	8	9

BI_A3N1D

interconnection diagram

cable name =SH==L01+L18-W67	cable type PUR		
remark	no. of cores 4	cross-section 0.34	cable length –

function text	page/path	destinaton from	pin	core	destinaton to	pin	page/path	function text
Umreifungsaggregat hinten	=SH==L01+P01/6.6	=SH==L01-X15	14	BN	=SH==L01-B67	1	=SH==L01+P01/6.7	Umreifungsaggregat vorne
Umreifungsaggregat hinten	=SH==L01+P01/6.6	=SH==L01-X15	29	BU	=SH==L01-B67	3	=SH==L01+P01/6.7	Umreifungsaggregat vorne
				WH				
Umreifungsaggregat vorne	=SH==L01+P01/6.7	=SH==L01-X15	45	BK	=SH==L01-B67	4	=SH==L01+P01/6.7	Umreifungsaggregat vorne

19 21

			date	26.08.13	Titan Umreifungstechnik	TITAN	=SH==L01+L18-W67	= SH==AUSW	+ L18
			editor	Lo Grasso	Berliner Straße 51-55				
			check.	26.11.13	58332 Schwelm		VS11-H	T13079	Sh. 20
change	date	name	standa	VDE 0100	origin / replace for / replace through		Möllers		26 Sh.

BI_A3N1D

interconnection diagram

cable name =SH==M01+L18-W25		cable type ÖLFLEX	
remark		no. of cores 3/PE	cross-section 0.75	cable length –

function text	page/path	destinaton from	pin	core	destinaton to	pin	page/path	function text
Horizontaler Fahrschlitten	=SH==M01+P01/2.5	=SH==M01-X16	6	1	=SH==M01-Y25	A1	=SH==M01+P01/2.5	Horizontaler Fahrschlitten
Horizontaler Fahrschlitten	=SH==M01+P01/2.5	=SH==M01-X16	1	2	=SH==M01-Y25	A2	=SH==M01+P01/2.5	Horizontaler Fahrschlitten
				PE				

20

22

			date	26.08.13	Titan Umreifungstechnik	TITANO	=SH==M01+L18-W25	= SH==AUSW	+L18
			editor	Lo Grasso	Berliner Straße 51-55				
			check.	26.11.13	58332 Schwelm		VS11-H	T13079	Sh. 21
change	date	name	standa	VDE 0100	origin	replace for / replace through	Möllers		26 Sh.

BI_A3N1D

interconnection diagram

cable name =SH==M01+L18-W26			cable type ÖLFLEX
remark		no. of cores 3/PE	cross-section 0.75	cable length –

function text	page/path	destinaton from	pin	core	destinaton to	pin	page/path	function text
Horizontaler Fahrschlitten vorne	=SH==M01+P01/2.6	=SH==M01-X16	7	1	=SH==M01-Y26	A1	=SH==M01+P01/2.6	Horizontaler Fahrschlitten vorne
Horizontaler Fahrschlitten vorne	=SH==M01+P01/2.6	=SH==M01-X16	2	2	=SH==M01-Y26	A2	=SH==M01+P01/2.6	Horizontaler Fahrschlitten vorne
				PE				

21

23

			date	26.08.13	Titan Umreifungstechnik	TITAN	=SH==M01+L18-W26	= SH==AUSW	+L18
			editor	Lo Grasso	Berliner Straße 51-55				
			check.	26.11.13	58332 Schwelm		VS11-H	T13079	Sh. 22
change	date	name	standa	VDE 0100	origin	replace for	replace through	Möllers		26 Sh.

BI_A3N10

interconnection diagram

cable name =SH==M01+L18-W27		cable type ÖLFLEX	
remark		no. of cores 3/PE	cross-section 0.75	cable length –

function text	page/path	destinaton from	pin	core	destinaton to	pin	page/path	function text
Bandführungsarme öffnen Grundstellung	=SH==M01+P01/2.7	=SH==M01-X16	8	1	=SH==M01-Y27	A1	=SH==M01+P01/2.7	Bandführungsarme öffnen Grundstellung
Bandführungsarme öffnen Grundstellung	=SH==M01+P01/2.7	=SH==M01-X16	3	2	=SH==M01-Y27	A2	=SH==M01+P01/2.7	Bandführungsarme öffnen Grundstellung
				PE				

22

24

			date	26.08.13	Titan Umreifungstechnik	TITAN	=SH==M01+L18-W27	= SH==AUSW	+ L18
			editor	Lo Grasso	Berliner Straße 51-55				
			check.	26.11.13	58332 Schwelm		VS11-H	T13079	Sh. 23
change	date	name	standa	VDE 0100	origin	replace for / replace through	Möllers		26 Sh.

BI_A3N1D

interconnection diagram

cable name =SH==M01+L18-W28		cable type ÖLFLEX	
remark		no. of cores 3/PE	cross-section 0.75	cable length –

function text	page/path	destinaton from	pin	core	destinaton to	pin	page/path	function text
Bandführungsarme schließen	=SH==M01+P01/2.8	=SH==M01-X16	9	1	=SH==M01-Y28	A1	=SH==M01+P01/2.8	Bandführungsarme schließen
Bandführungsarme schließen	=SH==M01+P01/2.8	=SH==M01-X16	4	2	=SH==M01-Y28	A2	=SH==M01+P01/2.8	Bandführungsarme schließen
				PE				

			date	26.08.13	Titan Umreifungstechnik	TITAN	=SH==M01+L18-W28	= SH==AUSW	+L18
			editor	Lo Grasso	Berliner Straße 51-55				
			check.	26.11.13	58332 Schwelm		VS11-H	T13079	Sh. 24
change	date	name	standa	VDE 0100	origin	replace for / replace through	Möllers		26 Sh.

BI_A3N1D

interconnection diagram

cable name	=SH==M01+L18-W38	cable type	ÖLFLEX		
remark		no. of cores	3/PE	cross-section	0.75

function text	page/path	destinaton from	pin	core	destinaton to	pin	page/path	function text
Bandklemme auf / zu	=SH==M01+P01/3.8	=SH==M01-X16	10	1	=SH==M01-Y38	A1	=SH==M01+P01/3.8	Bandklemme auf / zu
Bandklemme auf / zu	=SH==M01+P01/3.8	=SH==M01-X16	5	2	=SH==M01-Y38	A2	=SH==M01+P01/3.8	Bandklemme auf / zu
				PE				

			date	26.08.13	Titan Umreifungstechnik	TITANO	=SH==M01+L18-W38	= SH==AUSW	+L18
			editor	Lo Grasso	Berliner Straße 51-55				
			check.	26.11.13	58332 Schwelm		VS11-H	T13079	Sh. 25
change	date	name	standa	VDE 0100	origin	replace for / replace through	Möllers		26 Sh.

B1_A3020_PRO

parts list

pos.	designation	amount	designation		order number	function text
22	=SH==DOKU+L18	1	Kompakt-Schaltschrank	380x380x210	08849904109	
23	=SH==LO1+L18-B51	1	Reflexions-Lichtschranke 0.03	1017880	08337000033	ReflexionsLichtschranke Einlauf aussen
24	=SH==LO1+L18-B51	1	Reflektor PL 30A, 30 x 50	2-Loch Befestigung	08337000002	ReflexionsLichtschranke Einlauf aussen
25	=SH==LO1+L18-B52	1	Reflexions-Lichtschranke 0.03	1017880	08337000033	ReflexionsLichtschranke Einlauf innen
26	=SH==LO1+L18-B52	1	Reflektor PL 30A, 30 x 50	2-Loch Befestigung	08337000002	ReflexionsLichtschranke Einlauf innen
27	=SH==LO1+L18-B53	1	Reflexions-Lichtschranke 0.03	1017880	08337000033	Kanalarmüberwachung am Umreifungsaggregat
28	=SH==LO1+L18-B53	1	Reflektor PL 30A, 30 x 50	2-Loch Befestigung	08337000002	Kanalarmüberwachung am Umreifungsaggregat
29	=SH==LO1+L18-B54	1	Reflexions-Lichtschranke 0.03	1017880	08337000033	Kanalarmüberwachung am Ausleger
30	=SH==LO1+L18-B54	1	Reflektor PL 30A, 30 x 50	2-Loch Befestigung	08337000002	Kanalarmüberwachung am Ausleger
31	=SH==LO1+L18-B55	1	Reflexions-Lichtschranke 0.03	1017880	08337000033	ReflexionsLichtschranke Auslauf innen
32	=SH==LO1+L18-B55	1	Reflektor PL 30A, 30 x 50	2-Loch Befestigung	08337000002	ReflexionsLichtschranke Auslauf innen
33	=SH==LO1+L18-B56	1	Reflexions-Lichtschranke 0.03	1017880	08337000033	ReflexionsLichtschranke Auslauf aussen
34	=SH==LO1+L18-B56	1	Reflektor PL 30A, 30 x 50	2-Loch Befestigung	08337000002	ReflexionsLichtschranke Auslauf aussen
35	=SH==LO1+L18-B61	1	Pneumatisches Bauteil	siehe Mechanik-Stückliste		Bandfangarm 1 Grundstellung Einlauf links
36	=SH==LO1+L18-B62	1	Pneumatisches Bauteil	siehe Mechanik-Stückliste		Bandfangarm 1 zum Coil Einlauf links
37	=SH==LO1+L18-B63	1	Pneumatisches Bauteil	siehe Mechanik-Stückliste		Bandfangarm 2 Grundstellung Auslauf rechts
38	=SH==LO1+L18-B64	1	Pneumatisches Bauteil	siehe Mechanik-Stückliste		Bandfangarm 2 zum Coil Auslauf rechts
39	=SH==LO1+L18-B67	1	Pneumatisches Bauteil	siehe Mechanik-Stückliste		Umreifungsaggregat vorne
40	=SH==LO1+L18-B76	1	Aggregatbauteil	siehe Aggregat-Ersatzteilliste		VS11L Kopf vor Packstück B7
41	=SH==LO1+L18-B77	1	Aggregatbauteil	siehe Aggregat-Ersatzteilliste		VS11L Kopf auf Packstück B8
42	=SH==LO1+L18-S65	1	Basisschalter	Sprungkontakte 2S+2OE	08310000149	Umreifungsaggregat hinten Grundstellung
43	=SH==LO1+L18-S65	1	Antriebskopf für Positionssch.		08310000148	Umreifungsaggregat hinten Grundstellung
44	=SH==LO1+L18-S65	1	Schwenkhebel f. Positionssch.	Metallhebel 27mm m. Stahlrolle	08332300771	Umreifungsaggregat hinten Grundstellung
45	=SH==MO1+L18-Y25	1	Mechanisches Bauteil	siehe Mechanik-Stückliste		Horizontaler Fahrschlitten Grundstellung
46	=SH==MO1+L18-Y26	1	Mechanisches Bauteil	siehe Mechanik-Stückliste		Horizontaler Fahrschlitten vorne
47	=SH==MO1+L18-Y27	1	Mechanisches Bauteil	siehe Mechanik-Stückliste		Bandführungsarme öffnen Grundstellung
48	=SH==MO1+L18-Y28	1	Mechanisches Bauteil	siehe Mechanik-Stückliste		Bandführungsarme schließen
49	=SH==MO1+L18-Y38	1	Mechanisches Bauteil	siehe Mechanik-Stückliste		Bandklemme auf / zu

+L19/1

			date	26.08.13	Titan Umreifungstechnik	TITAN	Stückliste	= SH==AUSW	+L18		
			editor	Lo Grasso	Berliner Straße 51-55						
			check.	26.11.13	58332 Schwelm		VS11-H	T13079		Sh. 26	
change	date	name	standa	VDE 0100	origin	replace for	replace through	Möllers			26 Sh.

terminal strip and connector overview

terminal strip and connector designation	text of the strip definition	terminals / connectors					graphic page of the terminal strip
		first	last	amount PE	amount N	totally amount	
=SH==L01+L19-XK1		1	39	0	0	35	=SH==AUSW+L19/2
=SH==L01+L19-XS1		A1	D3	0	0	13	=SH==AUSW+L19/4
=SH==M01+L19-XK1		51	83	0	0	33	=SH==AUSW+L19/5
=SH==M01+L19-XS1		A3	G4	0	0	15	=SH==AUSW+L19/7

			date	26.08.13	Titan Umreifungstechnik Berliner Straße 51-55 58332 Schwelm	TITAN	Klemmenleisten- und Steckerübersichtsplan VS11-H	= SH==AUSW	+ L19
			editor	Lo Grasso				T13079	Sh. 1
			check.	26.11.13					8 Sh.
change	date	name	standa	VDE 0100	origin / replace for / replace through		Möllers		

0	1	2	3	4	5	6	7	8	9

BI_A3K2D

terminal diagram

terminal strip designation

=SH==L01+L19-XK1

function text	cable name / typ	target destination	connection	terminal number	jumper	connection name	target destination	connection	cable name / typ	page/path
VS11L Bandstopschalter B1		-B71	4	1	o	E9.0	-XS1	B1		=SH==L01+P01/7.1
VS11L Zählschalter B2		-B72	4	2	o		-XS1	B2		=SH==L01+P01/7.2
VS11L 0-Position B3		-B73	4	3	o	E9.2	-XS1	B3		=SH==L01+P01/7.3
VS11L Klemmposition B4		-B74	4	4	o	E9.3	-XS1	B4		=SH==L01+P01/7.4
VS11L Sicherheitsschalter Klappe		-B75	4	5	o	E9.4	-XS1	C1		=SH==L01+P01/7.5
VS11L Service-Schalter Band				6	o					=SH==L01+P01/7.8
-				7	o					=SH==L01+P01/7.8
-		-B78	14	8	o	E9.7	-XS1	C4		=SH==L01+P01/7.8
VS11L Service-Schalter Verschluß		-S101	14	9	o	E3.0	-XS1	D1		=SH==L01+P01/10.1
VS11L Reserve				10	o	E3.1	-XS1	D2		=SH==L01+P01/10.2
-				11	o	E3.2	-XS1	D3		=SH==L01+P01/10.3
-				12	o					=SH==L01+P01/10.4
-				13	o					=SH==L01+P01/10.5
VS11L Bandstopschalter B1		-B71	1	14			-XS1	A1		=SH==L01+P01/7.1
VS11L Zählschalter B2		-B72	1	15						=SH==L01+P01/7.2
VS11L 0-Position B3		-B73	1	16						=SH==L01+P01/7.3
VS11L Klemmposition B4		-B74	1	17						=SH==L01+P01/7.4
VS11L Sicherheitsschalter Klappe		-B75	1	18						=SH==L01+P01/7.5
VS11L Service-Schalter Band		-B78	13	21						=SH==L01+P01/7.8
VS11L Service-Schalter Verschluß		-S101	13	22						=SH==L01+P01/10.1
-				23						=SH==L01+P01/10.2
VS11L Reserve				24						=SH==L01+P01/10.3
-				25						=SH==L01+P01/10.4
-				26						=SH==L01+P01/10.5
VS11L Bandstopschalter B1		-B71	3	27			-XS1	A2		=SH==L01+P01/7.1
VS11L Zählschalter B2		-B72	3	28						=SH==L01+P01/7.2
VS11L 0-Position B3		-B73	3	29						=SH==L01+P01/7.3
VS11L Klemmposition B4		-B74	3	30						=SH==L01+P01/7.4
VS11L Sicherheitsschalter Klappe		-B75	3	31						=SH==L01+P01/7.5
VS11L Service-Schalter Band				34						=SH==L01+P01/7.8
VS11L Service-Schalter Verschluß				35						=SH==L01+P01/10.1
VS11L Reserve				36						=SH==L01+P01/10.2

1 3

			date	26.08.13	Titan Umreifungstechnik	TITAN	=SH==L01+L19-XK1	= SH==AUSW	+L19
			editor	Lo Grasso	Berliner Straße 51-55		VS11-H	T13079	Sh. 2
			check.	26.11.13	58332 Schwelm				8 Sh.
change	date	name	standa	VDE 0100	origin / replace for / replace through		Möllers		

BI_A3K2D

terminal diagram

terminal strip designation

=SH==L01+L19-XK1

function text	cable name	typ	target destination	connection	terminal number	jumper	connection name	target destination	connection	cable name	typ	page/path
VS11L Reserve					37							=SH==L01+P01/10.3
-					38							=SH==L01+P01/10.4
-					39							=SH==L01+P01/10.5

		date	26.08.13	Titan Umreifungstechnik	TITAN	=SH==L01+L19-XK1	= SH==AUSW	+ L19
		editor	Lo Grasso	Berliner Straße 51-55				
		check.	26.11.13	58332 Schwelm		VS11-H	T13079	Sh. 3
change	date	name	standa	VDE 0100	origin	replace for	replace through	Möllers		8 Sh.

BI_A3K2D

terminal diagram

terminal strip designation

=SH==L01+L19-XS1

function text	cable name	typ	target destination	connection	terminal number	jumper	connection name	target destination	connection	cable name	typ	=SH==L01+L10-W71	page/path
											ÖLFLEX-FD 855P		
VS11L Bandstopschalter B1			-XK1	14	A1	o		+L10-X15	29			1	=SH==L01+P01/7.1
-			-XK1	27	A2	o		+L10-X15	30			2	=SH==L01+P01/7.1
-			-XK1	1	B1	o	E9.0	+L10-X15	65			4	=SH==L01+P01/7.1
VS11L Zählschalter B2			-XK1	2	B2	o		+L10-X15	66			5	=SH==L01+P01/7.2
VS11L O-Position B3			-XK1	3	B3	o	E9.2	+L10-X15	67			6	=SH==L01+P01/7.3
VS11L Klemmposition B4			-XK1	4	B4	o	E9.3	+L10-X15	68			7	=SH==L01+P01/7.4
VS11L Sicherheitsschalter Klappe			-XK1	5	C1	o	E9.4	+L10-X15	69			8	=SH==L01+P01/7.5
VS11L Zählschalter B2					C2	o		+L10-X15	31			31	=SH==L01+P01/7.2
-					C3	o		+L10-X15	32			32	=SH==L01+P01/7.2
VS11L Service-Schalter Band			-XK1	8	C4	o	E9.7	+L10-X15	72			11	=SH==L01+P01/7.8
VS11L Service-Schalter Verschluß			-XK1	9	D1	o	E3.0	+L10-X15	73			12	=SH==L01+P01/10.1
VS11L Reserve			-XK1	10	D2	o	E3.1	+L10-X15	74			13	=SH==L01+P01/10.2
-			-XK1	11	D3	o	E3.2	+L10-X15	75			14	=SH==L01+P01/10.3

change	date	name	standa	date	editor	check.	origin	replace for	replace through
			VDE 0100	26.08.13	Lo Grasso	26.11.13			

Titan Umreifungstechnik
Berliner Straße 51-55
58332 Schwelm

TITAN

=SH==L01+L19-XS1
VS11-H
Möllers

= SH==AUSW
+ L19
T13079

Sh. 4
8 Sh.

BI_A3K2D

terminal diagram

terminal strip designation

=SH==M01+L19-XK1

function text	cable name	typ	target destination	connection	terminal number	jumper	connection name	target destination	connection	typ	cable name	page/path
VS11L Luftventil Mittelgang Y1			-Y51	A1	51	o	A2.0	-XS1	E1			=SH==M01+P01/5.1
VS11L Luftventil Eilgang Y2			-Y52	A1	52	o	A2.1	-XS1	E2			=SH==M01+P01/5.2
VS11L Transportmotor vor Y3			-Y53	A1	53	o	A2.2	-XS1	E3			=SH==M01+P01/5.3
VS11L Transportmotor zurück Y4			-Y54	A1	54	o	A2.3	-XS1	E4			=SH==M01+P01/5.4
VS11L Verschlußmotor Y5			-Y55	A1	55	o	A2.4	-XS1	F1			=SH==M01+P01/5.5
VS11L Spannmotor Y6			-Y56	A1	56	o	A2.5	-XS1	F2			=SH==M01+P01/5.6
VS11L Transportwippe Y7			-Y57	A1	57	o	A2.6	-XS1	F3			=SH==M01+P01/5.7
VS11L Richtvorrichtung Y8			-Y58	A1	58	o	A2.7	-XS1	F4			=SH==M01+P01/5.8
VS11L Bandstophebel Y9			-Y61	A1	59	o	A3.0	-XS1	G1			=SH==M01+P01/6.1
VS11L Spannwippe angedrückt Y16			-Y62	A1	60	o	A3.1	-XS1	G2			=SH==M01+P01/6.2
VS11L Klappe auf Y17			-Y63	A1	61	o	A3.2	-XS1	G3			=SH==M01+P01/6.3
VS11L Klappe zu Y18			-Y64	A1	62	o	A3.3	-XS1	G4			=SH==M01+P01/6.4
VS11L Luftventil Mittelgang Y1			-Y51	A2	63			-XS1	A3			=SH==M01+P01/5.1
VS11L Luftventil Eilgang Y2			-Y52	A2	64							=SH==M01+P01/5.2
VS11L Transportmotor vor Y3			-Y53	A2	65							=SH==M01+P01/5.3
VS11L Transportmotor zurück Y4			-Y54	A2	66							=SH==M01+P01/5.4
VS11L Verschlußmotor Y5			-Y55	A2	67							=SH==M01+P01/5.5
VS11L Spannmotor Y6			-Y56	A2	68							=SH==M01+P01/5.6
VS11L Transportwippe Y7			-Y57	A2	69							=SH==M01+P01/5.7
VS11L Richtvorrichtung Y8			-Y58	A2	70							=SH==M01+P01/5.8
VS11L Bandstophebel Y9			-Y61	A2	71							=SH==M01+P01/6.1
VS11L Spannwippe angedrückt Y16			-Y62	A2	72							=SH==M01+P01/6.2
VS11L Klappe auf Y17			-Y63	A2	73							=SH==M01+P01/6.3
VS11L Klappe zu Y18			-Y64	A2	74							=SH==M01+P01/6.4
-					75							=SH==M01+P01/6.5
VS11L Reserve					76							=SH==M01+P01/6.6
-					77	o						=SH==M01+P01/6.5
-					78	o		-XS1	A4			=SH==M01+P01/6.6
-					79	o						=SH==M01+P01/6.7
-					80	o						=SH==M01+P01/6.8
-					81			-XS1	D4			=SH==M01+P01/6.8
-					82							=SH==M01+P01/6.8

4 6

		date	26.08.13	Titan Umreifungstechnik	TITAN	=SH==M01+L19-XK1	= SH==AUSW	+L19
		editor	Lo Grasso	Berliner Straße 51-55		VS11-H	T13079	Sh. 5
		check.	26.11.13	58332 Schwelm				8 Sh.
change	date	name	standa VDE 0100	origin	replace for	replace through	Möllers	

0 1 2 3 4 5 6 7 8 9

BI_A3K2D

terminal diagram

function text	cable name / typ	terminal strip designation =SH==M01+L19-XK1 target destination	connection	terminal number	jumper	connection name	target destination	connection	cable name / typ	page/path
VS11L Reserve				83						=SH==M01+P01/6.9

			date	26.08.13	Titan Umreifungstechnik	TITAN	=SH==M01+L19-XK1	= SH==AUSW	+L19
			editor	Lo Grasso	Berliner Straße 51-55		VS11-H	T13079	Sh. 6
			check.	26.11.13	58332 Schwelm				8 Sh.
change	date	name	standa	VDE 0100	origin / replace for / replace through		Möllers		

BI_A3K2D

terminal diagram

terminal strip designation

=SH==M01+L19-XS1

function text	cable name	typ	target destination	connection	terminal number	jumper	connection name	target destination	connection	cable name	typ	=SH==L01+L10-W71	ÖLFLEX-FD 855P	page/path
VS11L Luftventil Mittelgang Y1			-XK1	63	A3	o		+L10-X16	11			3		=SH==M01+P01/5.1
VS11L Reserve			-XK1	78	A4	o		+L10-X16	24			30		=SH==M01+P01/6.6
-			-XK1	81	D4	o		+L10-X16	PE			PE		=SH==M01+P01/6.8
VS11L Luftventil Mittelgang Y1			-XK1	51	E1	o	A2.0	+L10-X16	12			17		=SH==M01+P01/5.1
VS11L Luftventil Eilgang Y2			-XK1	52	E2	o	A2.1	+L10-X16	13			18		=SH==M01+P01/5.2
VS11L Transportmotor vor Y3			-XK1	53	E3	o	A2.2	+L10-X16	14			19		=SH==M01+P01/5.3
VS11L Transportmotor zurück Y4			-XK1	54	E4	o	A2.3	+L10-X16	15			20		=SH==M01+P01/5.4
VS11L Verschlußmotor Y5			-XK1	55	F1	o	A2.4	+L10-X16	16			21		=SH==M01+P01/5.5
VS11L Spannmotor Y6			-XK1	56	F2	o	A2.5	+L10-X16	17			22		=SH==M01+P01/5.6
VS11L Transportwippe Y7			-XK1	57	F3	o	A2.6	+L10-X16	18			23		=SH==M01+P01/5.7
VS11L Richtvorrichtung Y8			-XK1	58	F4	o	A2.7	+L10-X16	19			24		=SH==M01+P01/5.8
VS11L Bandstophebel Y9			-XK1	59	G1	o	A3.0	+L10-X16	20			25		=SH==M01+P01/6.1
VS11L Spannwippe angedrückt Y16			-XK1	60	G2	o	A3.1	+L10-X16	21			26		=SH==M01+P01/6.2
VS11L Klappe auf Y17			-XK1	61	G3	o	A3.2	+L10-X16	22			27		=SH==M01+P01/6.3
VS11L Klappe zu Y18			-XK1	62	G4	o	A3.3	+L10-X16	23			28		=SH==M01+P01/6.4

6 8

			date	26.08.13	Titan Umreifungstechnik	TITAN	=SH==M01+L19-XS1	= SH==AUSW	+L19
			editor	Lo Grasso	Berliner Straße 51-55				
			check.	26.11.13	58332 Schwelm		VS11-H	T13079	Sh. 7
change	date	name	standa	VDE 0100	origin	replace for	replace through	Möllers		8 Sh.

parts list

pos.	designation	amount	designation	order number	function text
50	=SH==L01+L19-B71	1	Aggregatbauteil siehe Aggregat-Ersatzteilliste		VS11L Bandstopschalter B1
51	=SH==L01+L19-B72	1	Aggregatbauteil siehe Aggregat-Ersatzteilliste		VS11L Zählschalter B2
52	=SH==L01+L19-B73	1	Aggregatbauteil siehe Aggregat-Ersatzteilliste		VS11L 0-Position B3
53	=SH==L01+L19-B74	1	Aggregatbauteil siehe Aggregat-Ersatzteilliste		VS11L Klemmposition B4
54	=SH==L01+L19-B75	1	Aggregatbauteil siehe Aggregat-Ersatzteilliste		VS11L Sicherheitsschalter Klappe auf B6
55	=SH==L01+L19-B78	1	Aggregatbauteil siehe Aggregat-Ersatzteilliste		VS11L Service-Schalter Band einlegen B9
56	=SH==L01+L19-S101	1	Aggregatbauteil siehe Aggregat-Ersatzteilliste		VS11L Service-Schalter Verschluß B10
57	=SH==M01+L19-Y51	1	Aggregatbauteil siehe Aggregat-Ersatzteilliste		VS11L Luftventil Mittelgang Y1
58	=SH==M01+L19-Y52	1	Aggregatbauteil siehe Aggregat-Ersatzteilliste		VS11L Luftventil Eilgang Y2
59	=SH==M01+L19-Y53	1	Aggregatbauteil siehe Aggregat-Ersatzteilliste		VS11L Transportmotor vor Y3
60	=SH==M01+L19-Y54	1	Aggregatbauteil siehe Aggregat-Ersatzteilliste		VS11L Transportmotor zurück Y4
61	=SH==M01+L19-Y55	1	Aggregatbauteil siehe Aggregat-Ersatzteilliste		VS11L Verschlußmotor Y5
62	=SH==M01+L19-Y56	1	Aggregatbauteil siehe Aggregat-Ersatzteilliste		VS11L Spannmotor Y6
63	=SH==M01+L19-Y57	1	Aggregatbauteil siehe Aggregat-Ersatzteilliste		VS11L Transportwippe Y7
64	=SH==M01+L19-Y58	1	Aggregatbauteil siehe Aggregat-Ersatzteilliste		VS11L Richtvorrichtung Y8
65	=SH==M01+L19-Y61	1	Aggregatbauteil siehe Aggregat-Ersatzteilliste		VS11L Bandstophebel Y9
66	=SH==M01+L19-Y62	1	Aggregatbauteil siehe Aggregat-Ersatzteilliste		VS11L Spannwippe angedrückt Y16
67	=SH==M01+L19-Y63	1	Aggregatbauteil siehe Aggregat-Ersatzteilliste		VS11L Klappe auf Y17
68	=SH==M01+L19-Y64	1	Aggregatbauteil siehe Aggregat-Ersatzteilliste		VS11L Klappe zu Y18

BI_A3S2D

cable overview

cable name cable designation	source by	target to	cable type	total cores	used cores	cross-section mmř	m	remark	graphics - page
=SH==X03+LK25-W11	=SH==L01+P01-X15	=SH==X03-X25	ÖLFLEX	4/PE	2	1.5	-		/2

+L19/8

2

			date	26.08.13	Titan Umreifungstechnik	TITAN	Kabelübersicht	= SH==AUSW	+ LK25		
			editor	Lo Grasso	Berliner Straße 51-55						
			check.	26.11.13	58332 Schwelm		VS11-H	T13079		Sh. 1	
change	date	name	standa	VDE 0100	origin	replace for	replace through	Möllers		2 Sh.	

0	1	2	3	4	5	6	7	8	9

BI_A3N1D

interconnection diagram

cable name =SH==X03+LK25-W11		cable type ÖLFLEX	
remark		no. of cores 4/PE	cross-section 1.5	cable length -

function text	page/path	destinaton from	pin	core	destinaton to	pin	page/path	function text
Grundstellung Maschine	=SH==X03+P01/3.1	=SH==L01+P01-X15	67	1	=SH==X03-X25	1		
Grundstellung Maschine	=SH==X03+P01/3.4	=SH==L01+P01-X15	68	2	=SH==X03-X25	2		
				3				
				PE				

1

			date	26.08.13	Titan Umreifungstechnik	TITAN	=SH==X03+LK25-W11	= SH==AUSW	+ LK25
			editor	Lo Grasso	Berliner Straße 51-55				
			check.	26.11.13	58332 Schwelm		VS11-H	T13079	Sh. 2
change	date	name	standa	VDE 0100	origin / replace for / replace through		Möllers		2 Sh.